Bang & Olufsen

BEOCENTER 2800
TYPE 2630

BEOCENTER 4600
TYPE 2631

Bmaster 1500 · 2629.

SERVICE MANUAL

INTRODUCTION

Beocenter models 2800 and 4600, types 2630 and 2631, are combined sets in which the radio section and record player are identical.
The radio receiver circuits are identical with those of the Beomaster 2200, type 1601, and reference is therefore made to the functional description of that receiver.

CONTENTS

SECTION

Bang & Olufsen

TECHNICAL DATA DIN 45 500

AMPLIFIER

Power output	2 x 25 watts/4 ohms
	2 x 19 watts/8 ohms
Music power	2 x 40 watts/4 ohms
	2 x 25 watts/8 ohms
Speaker impedance	4 ohms
Harmonic distortion	<0.1 %
Intermodulation	<0.25 %
Frequency range	20 - 35,000 Hz
Power bandwith 1 %	10 - 50,000 Hz
Damping factor	>50
Input, TAPE	200 mV/470 kohms
Signal-to-noise ratio, PHONO	>60 dB
TAPE	>60 dB
Channel separation, 1000 Hz	>56 dB
250 - 10,000 Hz	>40 dB
Outputs, TAPE	100 mV/100 kohms
Headphones	Max. 14 V/220 ohms
BASS control at 40 Hz	±12 dB
TREBLE control at 12,500 Hz	±12 dB

FM TUNER

Range	87.5 - 108 MHz
Aerial	75/300 ohms
Sensitivity, stereo, 46 dB	25 µV/75 ohms
Frequency range	20 - 15,000 Hz
Harmonic distortion	<0.4 %
Channel separation, 1000 Hz	>35 dB
250 - 10,000 Hz	>30 dB
Pilot suppression 19 kHz	>45 dB
38 kHz	>50 dB

AM TUNER

LW	147 - 350 kHz
MW	520 - 1610 kHz
Sensitivity LW 200 kHz, 20 dB	90 µV
Sensitivity MW 1000 kHz, 20 dB	90 µV
Bandwith 3 dB	6 kHz

TAPE RECORDER

Compact Cassette	C 60 - C 90
Wow and flutter	<±0.2 %
Speed deviation	<±1 %
Fast forward and rewind C 60	85 sec.
Frequency range chrom	30 - 14,000 Hz
Signal-to-noise, chrom	>56
Dolby, chrom	>64
Channel separation, 1000 Hz	>40 dB
Erase attenuation, 1000 Hz	>70 dB

RECORD PLAYER

Speed deviation	<0.05 %
Wow and flutter	<0.09 %
Rumble unweighted	>42 dB
Rumble weighted	>62 dB

PICK-UP MMC 3000

Frequency range	20 - 20,000 Hz
Channel separation, 1000 Hz	>20 dB
Channel matching, 1000 Hz	<2 dB
Intermodulation	<1 %
Recommended stylus pressure	1.2 gram
Compliance	25×10^{-6} cm/dyn.
Radius of curvature	15 µm
Effective tip mass	0.5 mg

OTHER DATA
BEOCENTER 2800

Power supply	110-130-220-240 volts
Frequency	50 - 60 Hz
Consumption	20 - 150 watts
Dimensions W x H x D	50 x 12 x 37 cm
Weight	13 kg

OTHER DATA
BEOCENTER 4600

Power supply	110-130-220-240 volts
Frequency	50 Hz
Consumption	20 - 160 watts
Dimensions W x H x D	66 x 12 x 37 cm
Weight	18 kg

Subject to change without notice

DISASSEMBLY
RECORD PLAYER

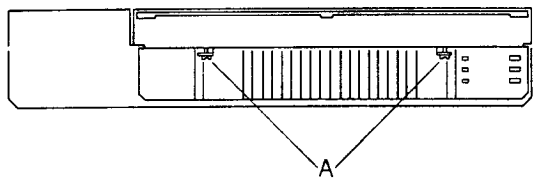

COVER FOR TAPE DECK

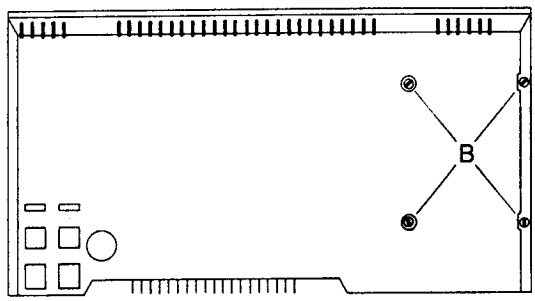

TAPE DECK

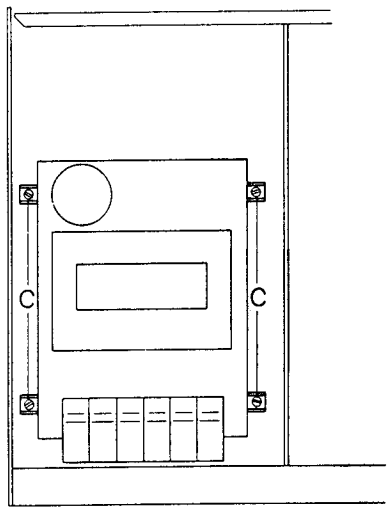

PC 9, TAPE AMPLIFIER

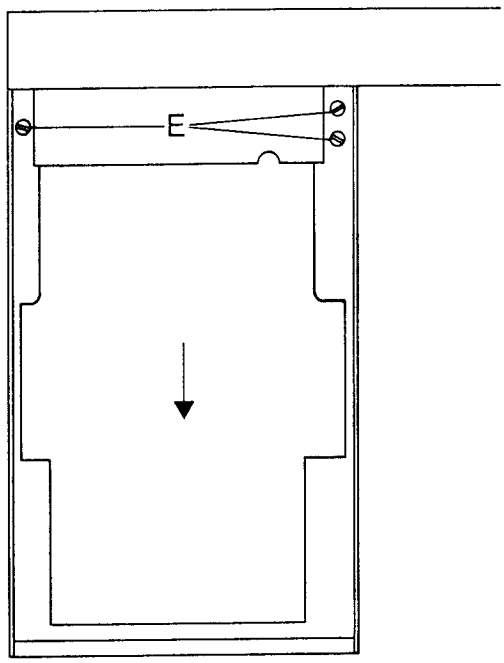

SIDE CABINET

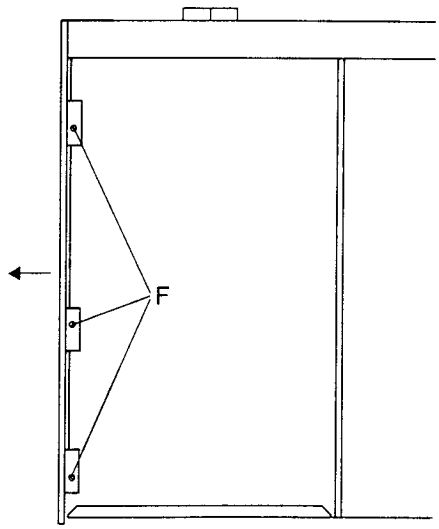

BOTTOM PLATE BEOCENTER 2800, TYPE 2631

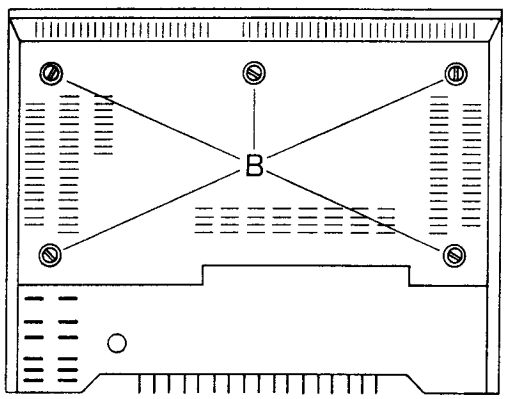

SERVICE TIPS

REMOVAL OF FRONT PROFILE

Remove gramophone, cassette cover, and the cabinet sides.

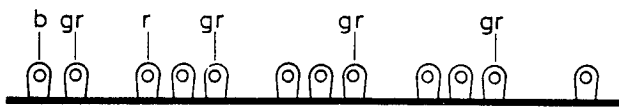

Push volume knob all the way to the right and push the tuning knob all the way to the left. Carefully take the dial cord out of the arms on the volume, tuning and level knobs.
Unsolder the leads on the preset unit.

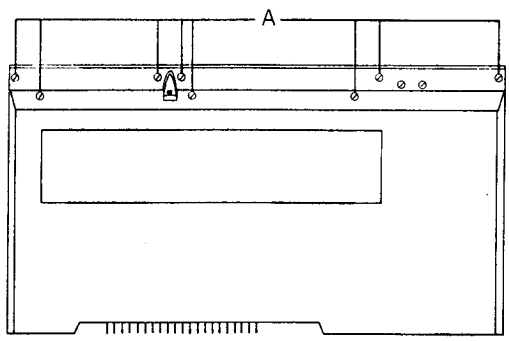

Remove screws A and B.
Loosen screws marked C and take the chassis sidepiece out of the notch in the front profile.

Carefully pull the front profile out (mind the cord drives) and remove the indicator holders.
When mounting the front profile make sure that the shafts of the slide potentiometers mesh with the slide knobs of the front profile.
Secure the dial cords with glue after they are mounted in the fork arms.

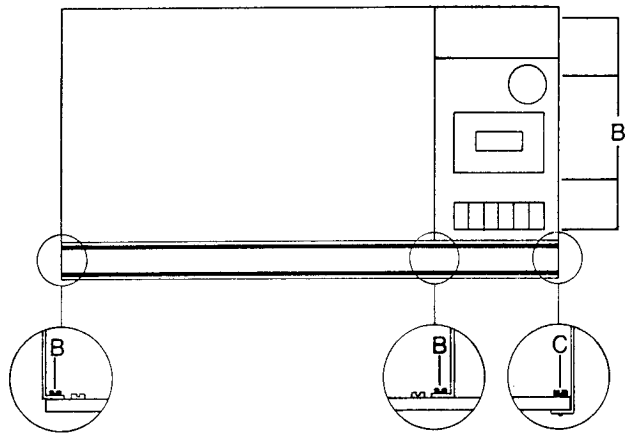

DIAL DRIVE

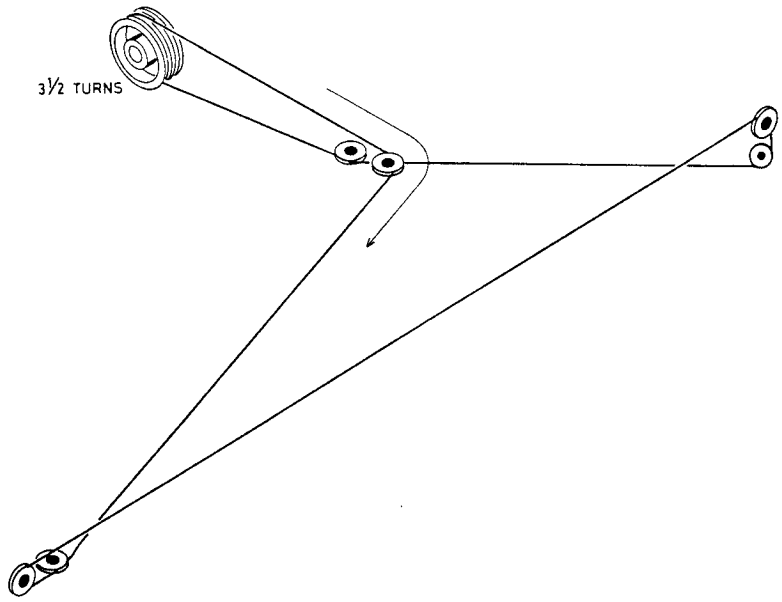

Dial cord is cut to a length of 125 cm and mounted as shown in the sketch.

LEDNINGSFARVER
COLOURS OF WIRES
KABELFARBEN

b	black	schwartz	sort
bl	blue	blau	blå
br	brown	braun	brun
gr	green	grün	grøn
grey	grey	grau	grå
or	orange	orange	orange
r	red	rot	rød
v	violet	violett	violet
wh	white	weiss	hvid
y	yellow	gelb	gul

ELECTRICAL DESCRIPTION OF TAPE RECORDER

The tape recorder of the Beocenter 4600 is, except for the indicator circuit, electrically identical with the Beocord 1100, type 2612.

INDICATOR CIRCUIT

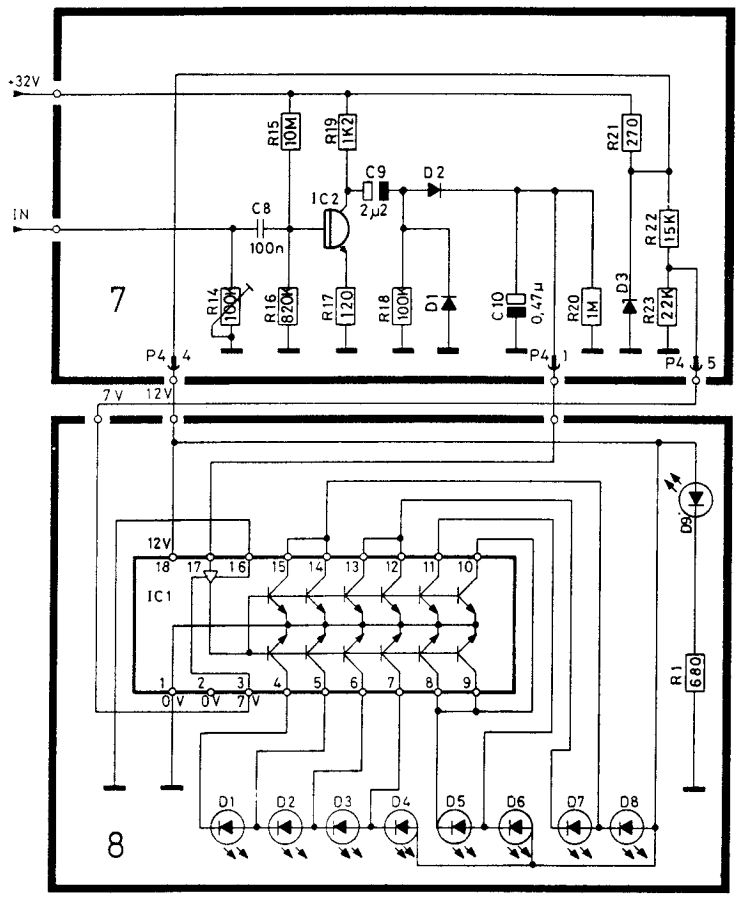

The recording level of the Beocenter 4600 is indicated by means of light-emitting diodes.
The AF signal is fed from the output of the recording amplifier to the base of 7IC2. 7R14 is for adjustment of VU 0. The AF signal is amplified in 7IC2 and rectified through 7D1 and 7D2 so that 7C10 carries a DC voltage whose value varies with the AF signal amplitude. The DC voltage is applied to pin 17 of 8IC1. Pin 17 is a DC amplifier which steps up the varying DC voltage. The DC amplifier has reference to chassis potential (pin 16) and to 7 V (pin 3). The value of the voltage at pin 3 determines the DC amplifier gain and hence the indicator's variation range.
The output of the DC amplifier is applied to the bases of a number of switch transistors, causing the outputs of 8IC1 to short-circuit to chassis potential at increasing voltage, in this sequence: pin 15, pin 14, pin 13, etc. In other words, 8D8 is the first green LED to light.
In order to have the same scale division as the VU meter, diodes 8D5 – 8D8 connect to two outputs of 8IC1. 8D1 and 8D2 indicate overdrive. 8IC1 is equipped with a constant-current generator so that a short-circuited LED will not damage the IC.

ELECTRICAL DESCRIPTION
RECORD PLAYER

The turntable is driven by a tacho-controlled DC motor. In principle the circuit is identical to the tacho control in Beogram 4002 – 6000, type 5511 to 5514. A generator in the motor furnishes an AC voltage whose frequency is dependent on the motor speed. This AC voltage is via 15C5 fed to pin 1 of 15IC1.
The AC voltage is converted into a square which is passed on to a Schmitt trigger. The frequency of the square, dependent on the motor speed, controls one of the output levels of the Schmitt trigger, the other output level is controlled from a variable time constant consisting 15C2, 15R2, 15R4, and 0R5 for 33 r.p.m., and 15C2, 15R5, and 0R15 for 45 r.p.m.

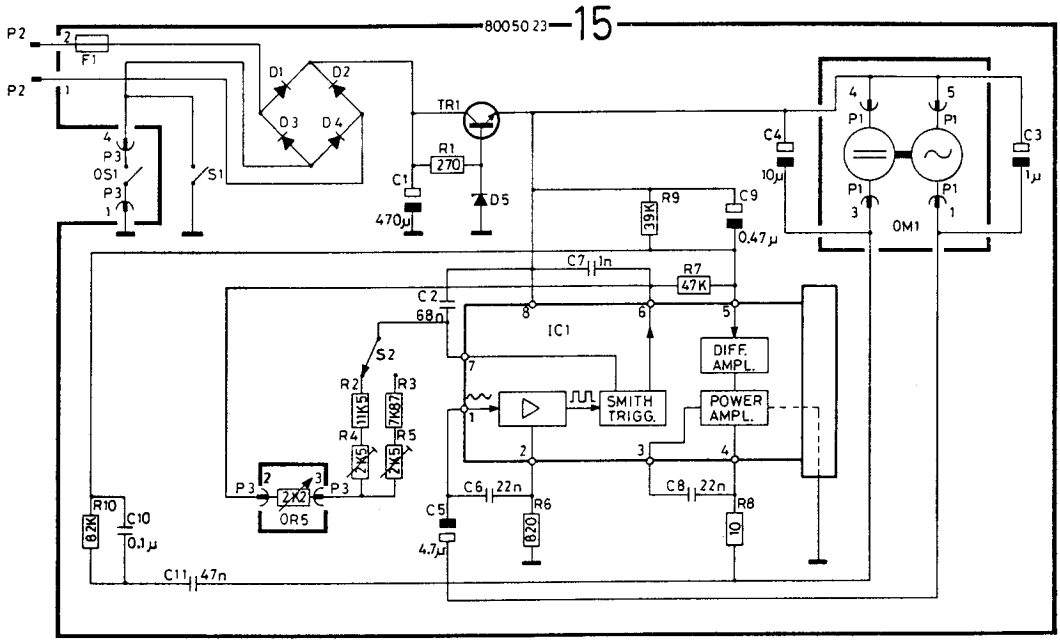

The output signal of the Schmitt trigger (pin 6) is integrated across 15R9 – 15C9 and fed to pin 5 which is a differential amplifier. The integrated signal at pin 5 will be a DC voltage which varies with the motor speed. This DC voltage is fed via the differential amplifier. The power amplifier is connected as a variable resistor to chassis potential. 15C11 – 15C10 – 15R10 provide negative feedback for the power amplifier, preventing "overregulation".
15R8 is connected as current limiter in series with the motor to prevent the motor from catching when starting up.

ADJUSTMENTS RECORD PLAYER

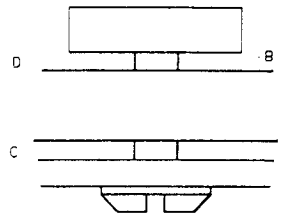

CHASSIS HEIGHT

Place the turntable and two weight-wise normal LP records on it.
The chassis should then float freely from all three transit bushings (see points B).
The turntable should likewise be parallel with the cover plate.
Adjustments are performed with screws A.

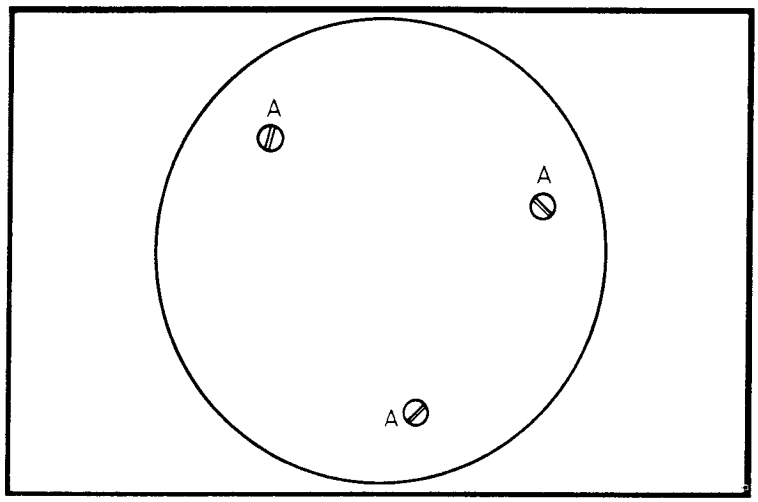

PICK-UP HEIGHT

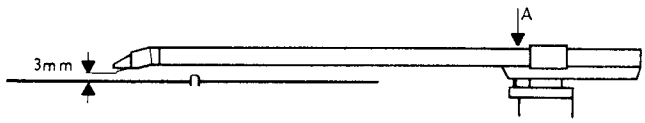

Put a record on the turntable.
Place the pickup arm above the run-off groove.
Adjust the screw A until the distance from the stylus to the record is 3 mm.
Adjustment is performed with a counterbalance weight inserted.

PICKUP ARM BALANCE

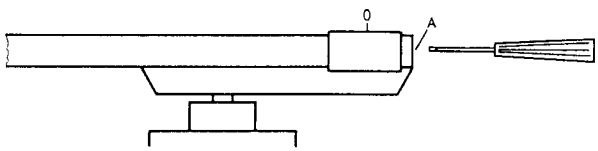

Set the stylus-force adjustment slider to the 0 position.
Adjust screw A until the pickup arm is only just in balance.
Thereafter set the stylus force to the recommended value.

PICKUP PARALLELISM

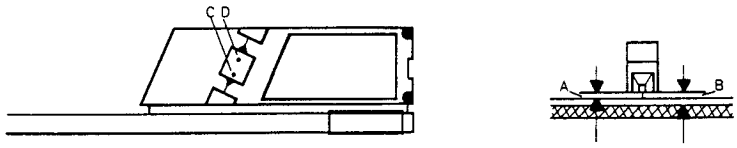

With screws C and D adjust so that distances A and B are identical and the plane portion of the pickup is parallel with the top side of the record.
Adjustment is performed with a counterbalance weight inserted.

ANTISKATING

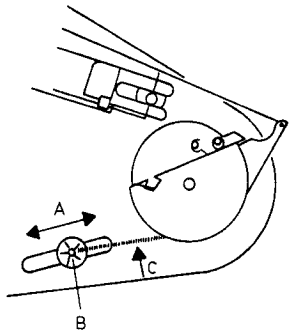

Put test record 3621004 on the turntable.
Set stylus force to 1.2 grams.
Play cut 1.
Connect oscilloscope to right and left channels.
Push arm B in direction of arrow A until the same amount of distortion is present in both channels (in case of distortion in left channel, slacken spring C; for right channel, tighten the spring).
Check:
Set stylus force to 1.4 grams.
Again play cut 1 with oscilloscope connected to right and left channels; no distortion should occur.

PICKUP ARM LANDING

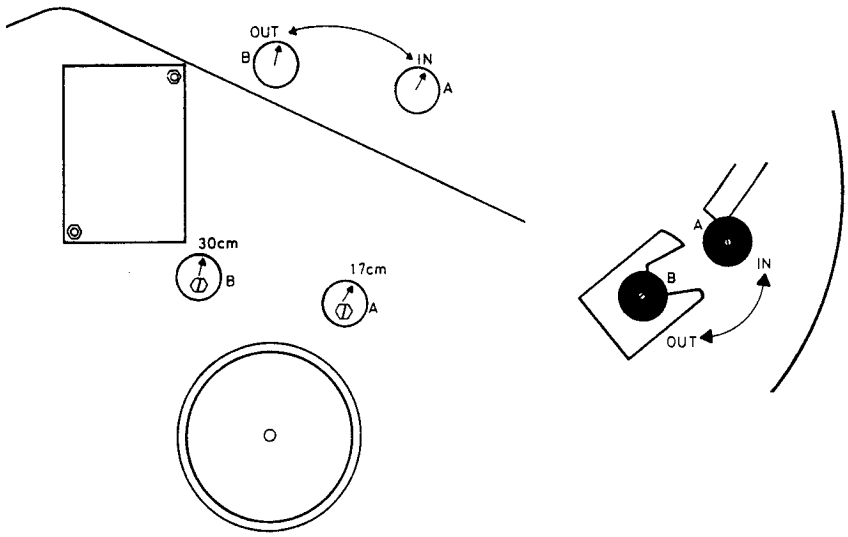

With "45" activated, adjust excentric A so that the pickup when travelling in automatically will lower into the field marked 17 cm in the sketch above.
Excentric B should be adjusted so that the pickup lowers into the field marked 30 cm with "33" activated.

ADJUSTMENTS

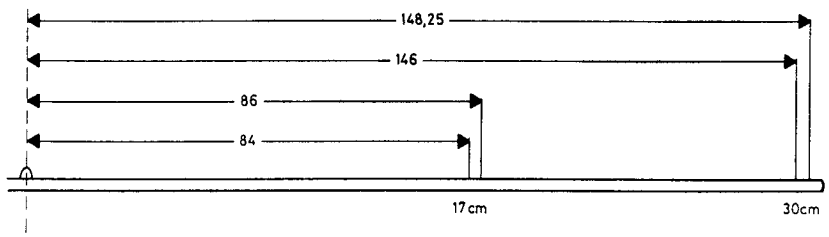

SPEED ADJUSTMENT

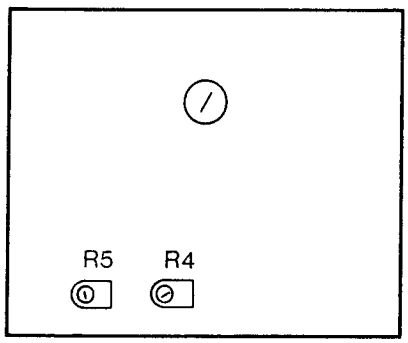

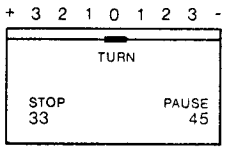

Set the scale for speed adjustment to 0.
Adjust 33 r. p. m. with potentiometer 15R4.
Adjust 45 r. p. m. with potentiometer 15R5.
Speed can be checked in more than one way.

1. Stroboscope disc and a lamp connected to the mains. This check has an inherent uncertainty of approx. 3 % since the mains frequency deviates by approx. ± 1 Hz at 50 Hz.
2. Stroboscope disc and stroboscope lamp. This gives an accuracy corresponding to the tolerance of the stroboscope lamp, usually much better than that of the mains frequency.

NB. 15R4 and 15R5 may be adjusted from above.
Dismount the turntable.

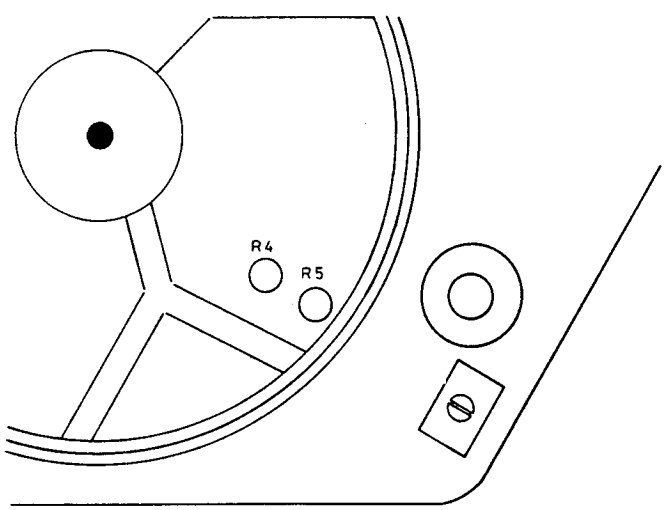

MECHANICAL FUNCTION AND ADJUSTMENT

The sketches below show the mechanical functions of the tape mechanism. Only activate mechanical parts are accentuated.

PLAY

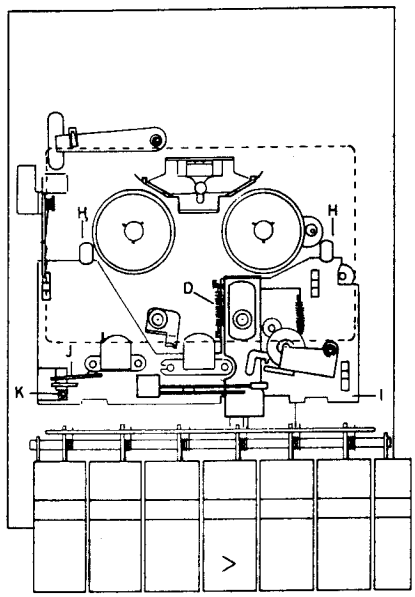

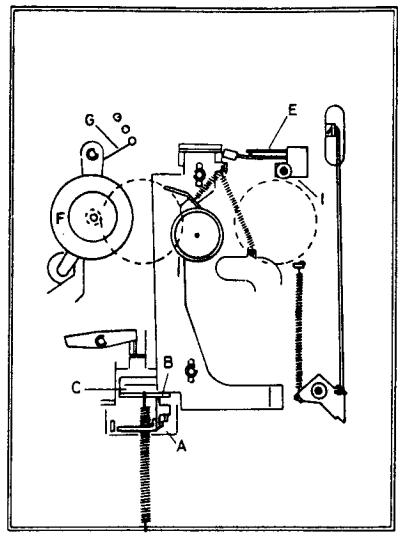

When the Play button is in its depressed and locked position there should be contact between A, B and C; and spring D should be tight. Also, plate I should go all the way forwards against stop blocks H.

When the right-hand reel is stopped, clutch F should slide in the friktion between felt and Delrin (Delrin is a Plastic). If it does not, tighten spring G or replace clutch F. Switch E should be ON. Adjustment can be made by loosening screw I and turning switch E.

The switch J must be OFF, but take care that the switch J is ON in position stop and fast tape motion. This may be adjusted by the screw K.

RECORD

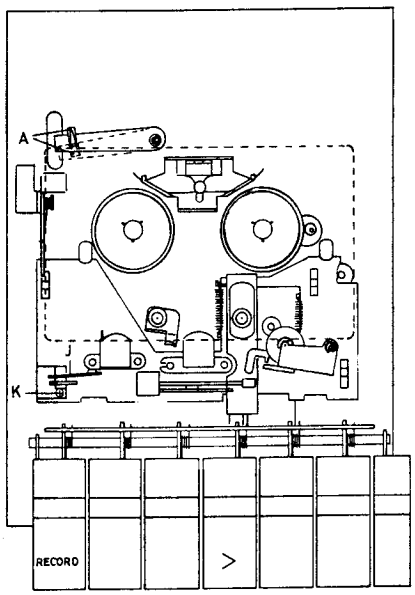

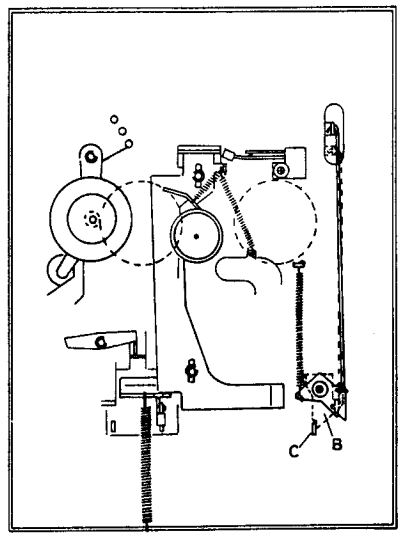

Arm A should be adjusted (bent) so that angle B provides positive locking of arm C (Record button) when a cassette is inserted with the record lock window open and so that arm B is positively disengaged from arm C when the cassette record lock window is closed.

PAUSE

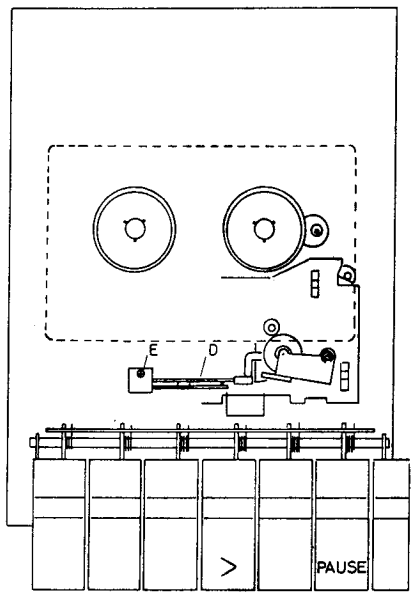

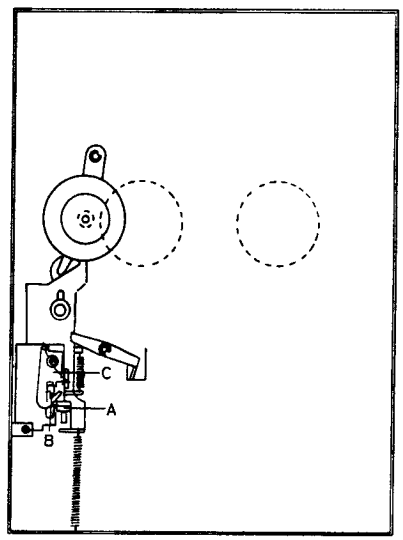

For Service Manuals Contact
MAURITRON TECHNICAL SERVICES
8 Cherry Tree Rd, Chinnor
Oxon OX9 4QY
Tel:- 01844-351694 Fax:- 01844-352554
Email:- enquiries@mauritron.co.uk

Tag A should be bent so that the thrust roller is pulled positively clear of the capstan shaft and so that pin B is positively gripped by locking mechanism C when the pause button is depressed.
Switch D should be ON. This can be adjusted by loosening screw E and turning switch D.

FAST FORWARD

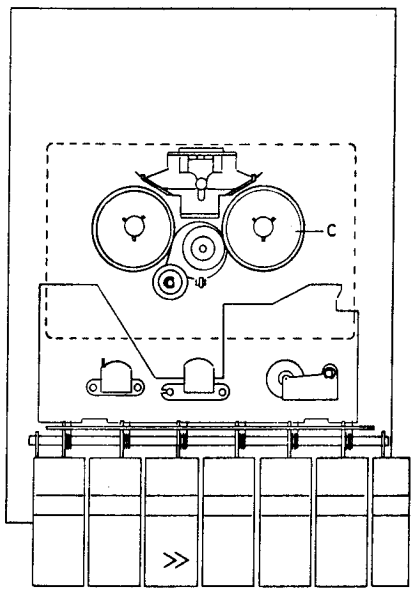

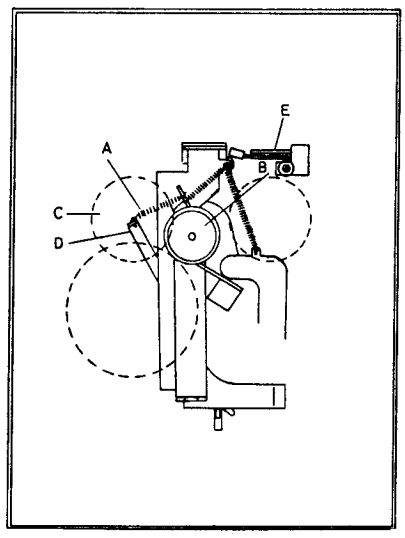

Spring A should be only just tight enough so that the transmission slips in the cluth below idler wheel B when reel C is held fast. Adjustment is carried out by bending D. (Spring A must not be titht during Rewind). It may be necessary to replace or adjust idler wheel and clutch B.
Switch E should be ON.

REWIND

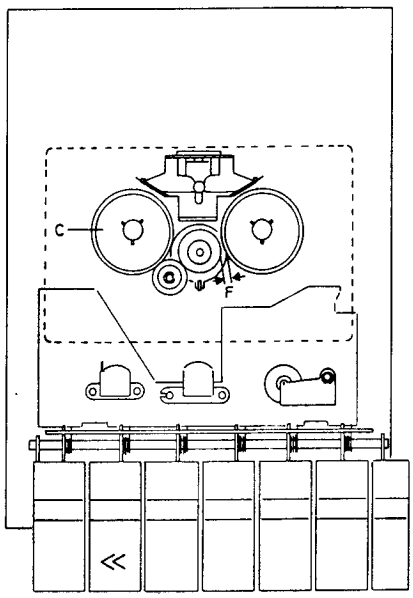

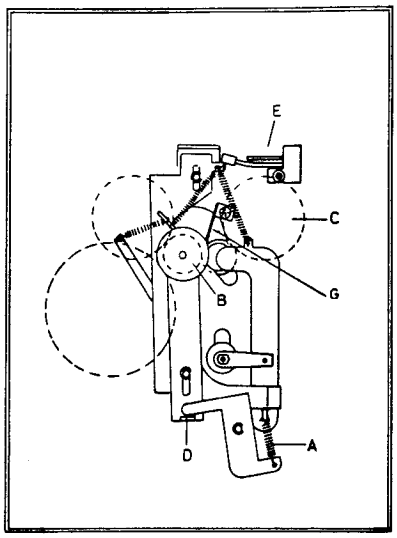

With the unit set at Stop, adjust leaf spring G so that spacing F ⩽ 0.4 mm. Spring A should be only just tight enough so that the transmission slips in the clutch below idler wheel B when reel C is held fast. It may be necessary to adjust or replace clutch B. Switch E should be ON.

STOP / AUTOMATIC STOP

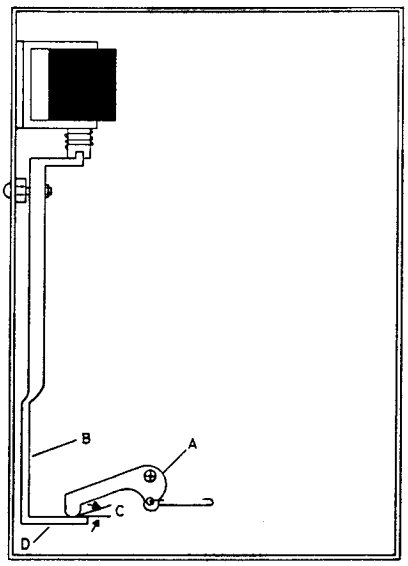

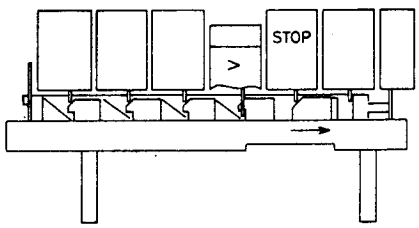

The arm B should be bent at point D so that spacing C between A and B is zero with the unit in the Stop and Play positions.

EJECT

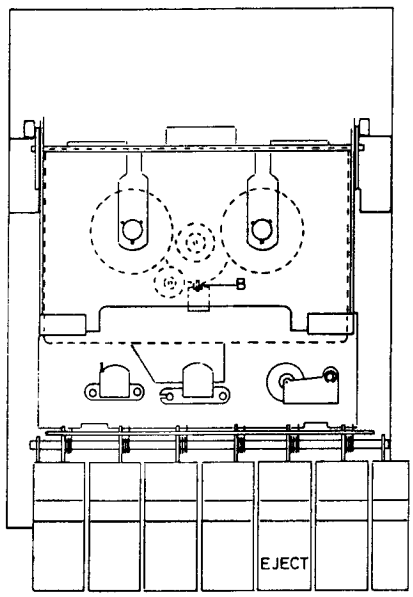

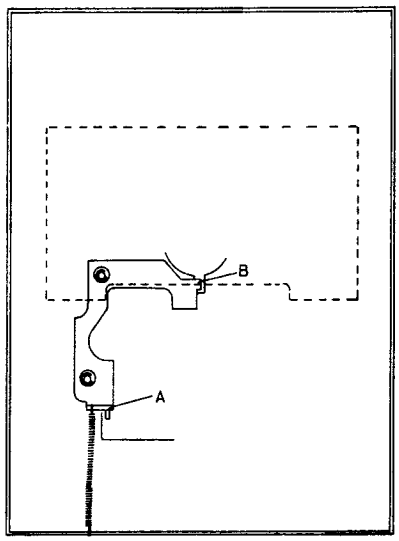

Eject should be adjusted so that notch B locks the cassette holder when the latter is pressed down and so that it releases positively when the Eject button is depressed (with all other buttons released).
Adjustment is performed by bending the angle A. Adjustment should be made so that Stop does not release Eject.

BRAKES

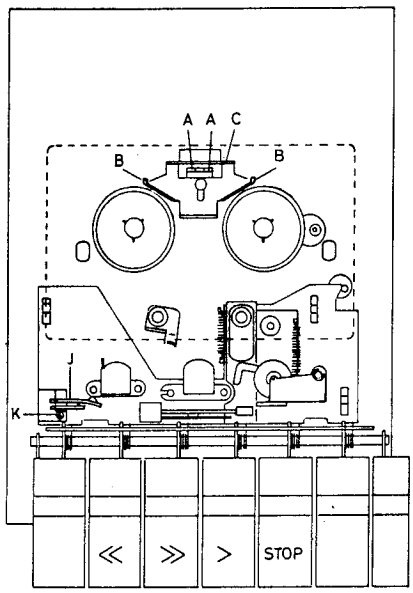

Brakes B should disengage positively and simultaneously from the reels when one of the fast tape movements or Play are operated. The brakes are adjusted by bending tags A. In addition, adjustment should be so that clearance exists between A and brake disc C with the unit set at Stop.

LUBRICATION

The need for lubrication is negligible, but the directions given below should be followed during overhauls and when replacing major mechanical components.

Capstan shaft bearing (top) 2 × Sliding surface against pulley	3984211 Oilit, Castrol (small amount)
Idler wheel 276: Face sliding against shaft 277 Angle 344: Face sliding against arm 340, arm 345 and arm 349 Angle 277: Face sliding against arm 234 Angle 330: Face sliding against chassis and washers on two guide pins	3984216 Molykote (pasta G, small amount)
Spring 216: Surface of contact with 218 Ball 218: Surface of contact with 216 and 222 Tape head bridge 222: Surface of contact with 226 (4 rollers) and 218 (2 balls) Roller 226: Surface of contact between chassis and 222 Arm 220: Face sliding against chassis 222	3984217 Gear grease, Bosch (small amount)
Capstan bearing (bottom)	Keep clean

ELECTRICAL ADJUSTMENTS

TAPE RECORDER

Non-bracketed references apply to left channel; bracketed ones apply to right channel.

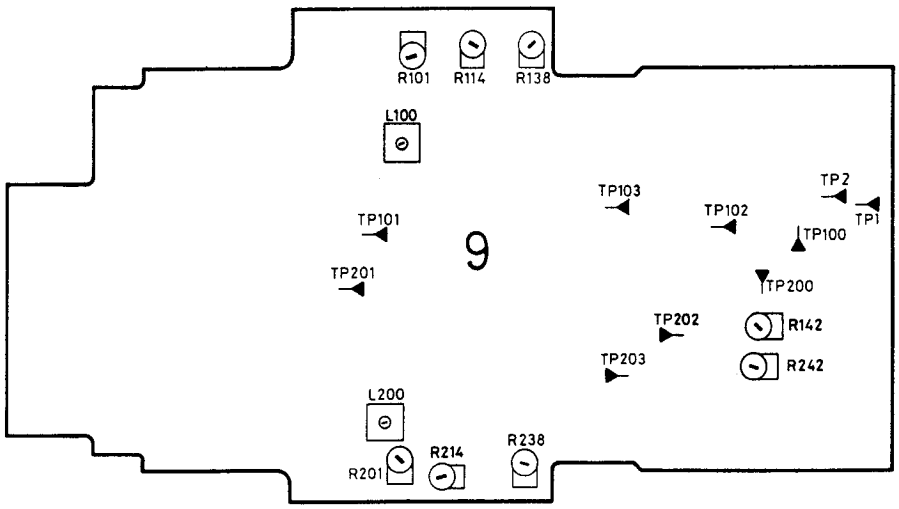

AZIMUTH

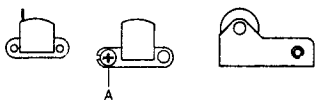

Demagnetise sound head and erase head.
Connect AF vacuum-tube voltmeter at 9TP100 (9TP200).
Insert azimuth tape 6780036.
Adjust screw A for max. response in both channel and identical output for left and right channels (mean value).
Lock screw A with glue.

19 kHz FILTER

Connect tone generator at 9TP101 (9TP201). Set generator to deliver 19 kHz 100 mV.
9R101 (9R201) to mid-scale.
Connect AF vacuum-tube voltmeter at 9TP102 (9TP202).
Adjust 9L100 (9L200) for min. AF vacuum-tube voltmeter reading.

PLAYBACK LEVEL

Insert Pegel tape (333 Hz), 6780035.
Adjust 9R101 for 720 mV as measured with AF vacuum-tube voltmeter at 9TP100.
Adjust 9R201 for 720 mV as measured at 9TP200.

PLAYBACK FREQUENCY RESPONSE

Activate CrO_2.
Insert playback frequency tape 6780056 (time constants 70 μsec. and 3180 μsec.).
Adjust 9R114 so that 12.5 kHz level is max. 1.5 dB below 250 Hz level as measured with AF vacuum-tube voltmeter at 9TP100.
(9R214 at 9TP200).

INDICATOR AND RECORD AMPLIFIER

Stop erase generator (short-circuit 9C7).
Set tone generator to deliver 333 Hz 100 mV as measured with AF vacuum-tube voltmeter at 9TP1.
Connect AF vacuum-tube voltmeter at 9TP103.
Set record potentiometer so that 3 V is measured at 9TP103.
Adjust 7R14 so that first red LED lights.
Back off tone generator 20 dB.
Read and note voltage at 9TP103.
Set tone generator to deliver 12.5 kHz.
Adjust 9R138 so that 12.5 kHz level at 9TP103 is 14 dB higher than 333 Hz level.
Set tone generator to deliver 333 Hz 100 mV as measured with AF vacuum-tube voltmeter at (9TP2).
Connect AF vacuum-tube voltmeter at (9TP203).
Set record potentiometer so that 3 V is measured at (9TP203).
Back off tone generator 20 dB.
Read and note voltage at (9TP203).

Set tone generator to deliver 12.5 kHz.
Adjust (9R238) so that 12.5 kHz level at (9TP203) is 14 dB higher than 333 Hz level.
Remote short-circuit from across 9C7.

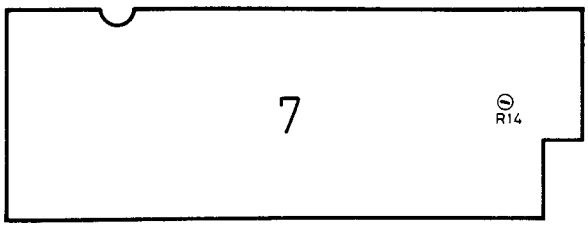

BIAS

Set tone generator to deliver 333 Hz 100 mV as measured with AF vacuum-tube voltmeter at 9TP1 (9TP2).
Connect AF vacuum-tube voltmeter at 9TP100 (9TP200).
Insert standard tape 6780040.
Adjust record potentiometer so that first red LED only just lights.
Back off tone generator 20 dB.
Record and play back 333 Hz and 12.5 kHz. Adjust 9R142 (9R242) so that 12.5 kHz level is 2.5 dB below 333 Hz level.

ADJUSTMENTS RADIO PART

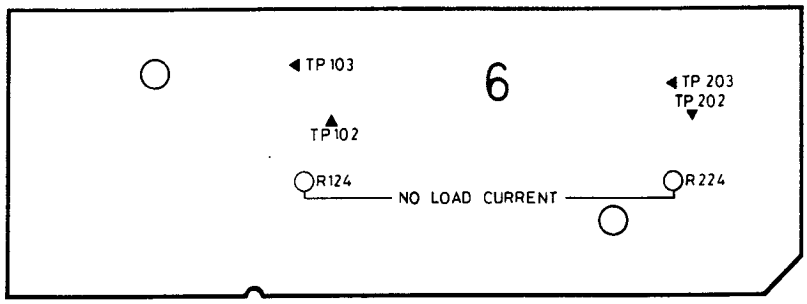

NO–SIGNAL CURRENT

No-signal current is adjusted with the receiver cold and with the volume control turned fully down. *Speakers must not be connected.*
With 6R124 (6R224) adjust for 25 mA collector current in 6IC100 (6IC200) or 10 mV across 6R125 (6R225), 6TP102 and 6TP103 (6TP202 and 6TP203).
After power has been applied for 10 minutes with the volume control turned fully down, check the no-signal current and again adjust for 25 mA or 10 mV across the emitter resistor.

TUNING VOLTAGE

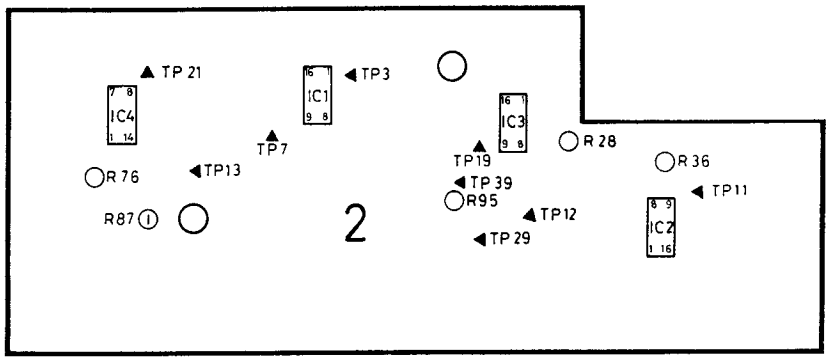

For Service Manuals Contact
MAURITRON TECHNICAL SERVICES
8 Cherry Tree Rd, Chinnor
Oxon OX9 4QY
Tel:- 01844-351694 Fax:- 01844-352554
Email:- enquiries@mauritron.co.uk

Depress the FM button and turn the FM dial pointer against the right-hand stop. Adjust 2R28 for 25.5 V at 2TP19. Turn FM dial pointer against the left-hand stop. Adjust 2R95 for 4.6 V at 2TP39.

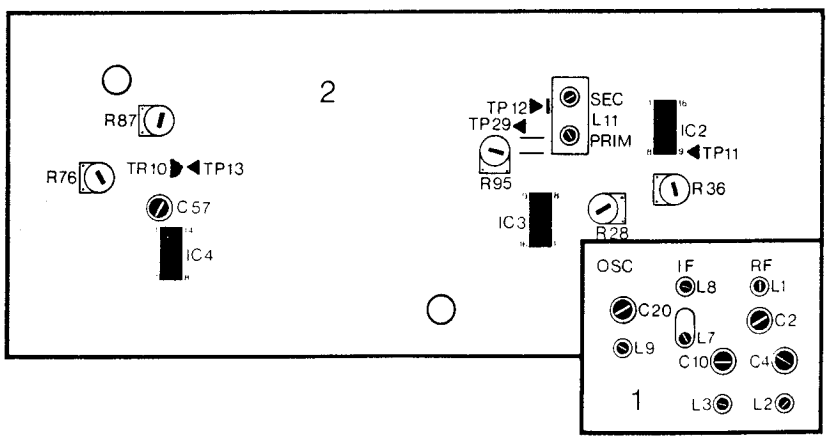

FRONT END, TUNER

Set dial potentiometer at 89 MHz. Set sweep generator at 89 MHz. Adjust 1L1, 1L2, 1L3 and 1L9 for max. IF curve at 2TP11.
Set dial pointer at 106 MHz. Set sweep generator at 106 MHz. With 1C2, 1C4, 1C10 adjust for max. IF curve.
Check dial accuracy and repeat adjustments if necessary.
Set dial pointer at 97 MHz. Set sweep generator at 97 MHz.
With 1L7 and 1L8 adjust for max. IF curve.

IF AND DETECTOR

Tune in a weak signal, under 10 μV, without the AFC cut in. Measure DC voltage at 2TP13. Set tuning control for min. DC voltage, representing correct tuning to signal.

Apply a strong signal (0.5 mV) to the receiver. With the detector coils of 2L11 adjust for max. output signal at 2TP12.
With the sec. of 2L11 adjustment can be made for min. distortion as measured at 2TP12.

TUNING INDICATOR

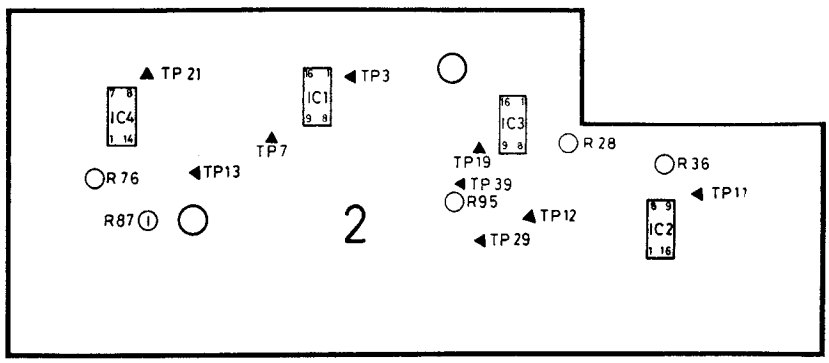

Tune the receiver correctly to an FM station (0 V between pin 5 and pin 6 of 2IC2 (2TP12 and 2TP29).
With 2R87 adjust for identical brightness of both lamps.

LEVEL

Apply a 10 μV signal to the aerial input.
Depress AFC/ST button.
Tune receiver accurately to the signal generator frequency, say 97 MHz.
Adjust 2R36 so that muting only just operates.

DECODER

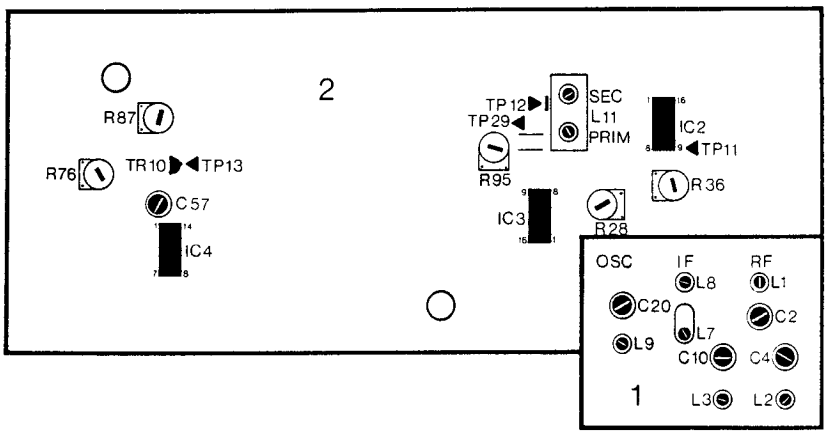

Shut off the stereo decoder input by shorting 2R58. With 2C57 adjust the internal oscillator accurately to 19 kHz as measured at 2TP21.
The accuracy can be checked in two ways:

1. By connecting a frequency counter to 2TP21.
2. By applying 19 kHz from 2TP21 to the oscilloscope y-input and 19 kHz from a stereo coder to the oscilloscope x-input. When the Lissajous figure is stationary, adjustment is correct.

A third way to adjust the internal oscillator is as follows:

3. Tune in a stereo signal. Turn 2C57 to one side until the stereo lamp goes out. Then turn 2C57 to the other side until the stereo lamp goes out. The setting midway between these two settings represents correct adjustment.

CHANNEL SEPARATION

Connect stereo coder to aerial input, f. mod. 1 kHz, Δ f 40 kHz, pilot 8 - 10 %, AFC on.
Connect wattmeter to amplifier output.
Set treble control at min. With 2R76 adjust for min. output in the unmodulated channel.
Make this adjustment both with unmodulated left channel and with unmodulated right channel.
Coils 2L12, 2L13, 2L14 and 2L15 are factory adjusted and should not be touched.

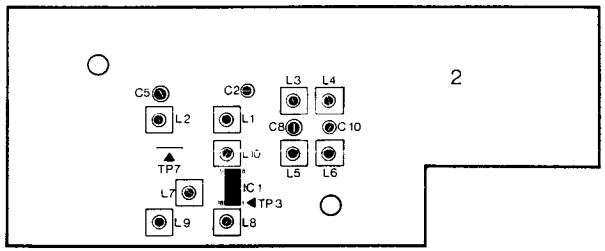

AM IF

Set receiver to MW, approx. 575 kHz.
Connect sweep generator to pin 1 of 2IC1 (2TP3).
Set sweep generator at 468 kHz, Δf 10 kHz (IF can be 468 kHz ± 1.5 kHz due to ceramic filter tolerances).
Connect oscilloscope to 2TP7.
Turn dust cores of 468 kHz parallel trap 2L5 and series trap 2L6 all the way out.
With 2L7, 2L8, 2L9 and 2L10 adjust for maximum IF curve (as shown in sketch).

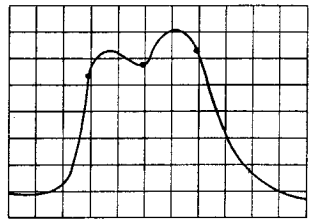

NOTE: Use weakest possible signal while aligning, so as to avoid operating the AGC.

PARALLEL AND SERIES TRAPS

Connect signal generator to aerial input through dummy aerial. Set generator to deliver 468 kHz, mod. 30 %, 400 Hz.
Connect wattmeter to amplifier output. Set treble control at min.
Set signal generator frequency to centre of receiver IF passband.
With 2L5 and 2L6 adjust for min. wattmeter reading.

MW OSCILLATOR AND SIGNAL FREQUENCY CIRCUITS

Connect signal generator to aerial input through dummy aerial. Set generator to deliver 575 kHz, mod. 30 %, 400 Hz.
Connect wattmeter to aerial output.
Depress MW button. Set receiver to 575 kHz.
With 2L1 align oscillator to that receiver is centered on the transmitting frequency.
With 2L4 adjust for max. wattmeter reading.
Set signal generator and receiver at 1495 kHz.
With 2C2 align oscillator.
With 2C10 adjust signal-frequency circuit for max. response.
Repeat adjustment procedure until correct dial matching and max. signal-frequency circuit response are obtained.
End with 2C10.

LW OSCILLATOR AND SIGNAL FREQUENCY CIRCUITS

Depress LW button. Set signal generator and receiver at 155 kHz.
With 2L2 align oscillator.
With 2L3 adjust signal-frequency circuit for max. response.
Set signal generator and receiver at 320 kHz.
With 2C5 align oscillator.
With 2C8 adjust signal-frequency circuit for max. response.
Repeat adjustment procedure until correct dial matching and max. signal-frequency circuit response are obtained.
End with 2C8.
NOTE: Use a weak signal when adjusting the AM oscillators. Adjust, by listening, for max. noise suppression in the centre of the frequency.

For Service Manuals Contact
MAURITRON TECHNICAL SERVICES
8 Cherry Tree Rd, Chinnor
Oxon OX9 4QY
Tel:- 01844-351694 Fax:- 01844-352554
Email:- enquiries@mauritron.co.uk

60 HTZ KIT 8410008

3190066
3302109 } TAPE DECK
3015019 LEVEL CONTROL
3302275 SLIDERS.

8002286 - Preset Tuning Control.
8230066 - Lamps.

3302290 Preset Cover.
7400109 + 7400108 SWITCHBANK WITH OFF SWITCH
7400160 - Complete SWITCH BANK
7400182 7400130
7400183 7400131 } Record/Playback Switch.
6270207 Ext Lead.
0583027 Rubber foot
7450044 - ON-OFF SWITCH.

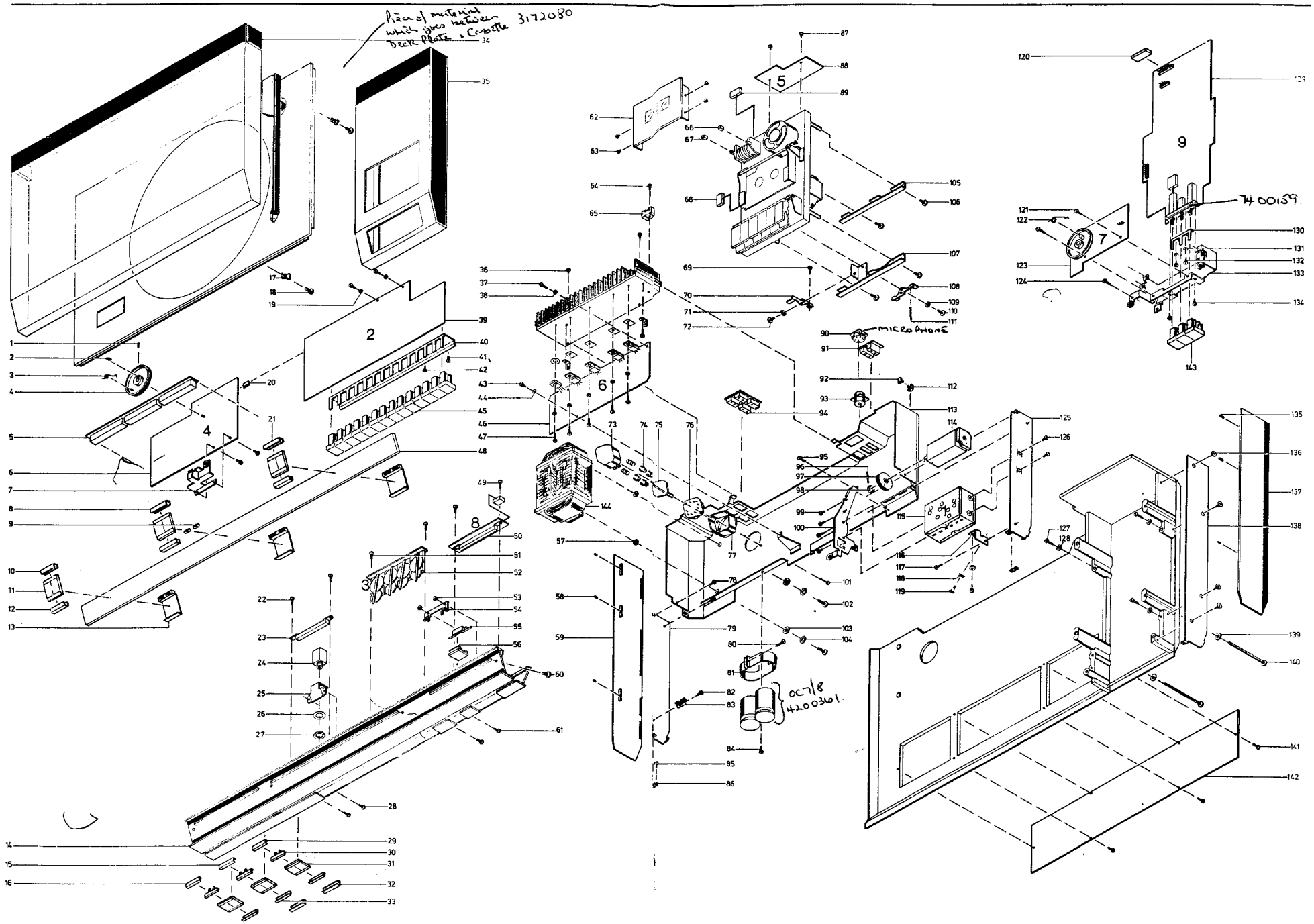
Piece of material which goes between Deck Plate & Cassette 3172080
MICROPHONE
OC718
4200361
7400159

For Service Manuals Contact
MAURITRON TECHNICAL SERVICES
8 Cherry Tree Rd, Chinnor
Oxon OX9 4QY
Tel:- 01844-351694 Fax:- 01844-352554
Email:- enquiries@mauritron.co.uk

1	2072919	Threaded pin
2	2380003	Square nut M3
3	0335149	Spring
4	2724050	Wheel —Volume.
5	8002319	PC unit
6	8002318	PC 4
	2548134	Bracket
7	2548146	Bracket
8	3302110	Screen, TUNING
9	~~2794018~~	Wheel 2794023.
10	3302274	Screen, VOLUME
11	3190066	Pointer glass
12	3302109	Screen
13	3015079	Slide
14	2568479	Front moulding, Beocenter 4600
	3456086	End piece, right } BLACK PLASTIC FILLETS.
	3456087	End piece, left
	2568480	Front moulding, Beocenter 2800
15	~~3152095~~	Screen, TREBLE 3152243
16	~~3152096~~	Screen, BASS 3152241.
17	2640034	Clamp
18	2042244	Screw
19	2622052	Fibre washer
20	3152063	Holder
21	3302275	Screen, LEVEL
22	2038247	Screw
23	3322050	Window
24	7212021	Jack socket
25	2548141	Bracket
26	2622157	Washer
27	2380092	Nut
28	2038007	Screw
29	~~3152098~~	Screen, BALANCE 3152242
30	3015033	Slide
31	3190076	Pointer glass
32	~~3152093~~	Screen, 3152092
33	3015032	Slide
34	3164312	Dust cover, assembled, Beocenter 4600
	3164313	Dust cover, assembled, Beocenter 2800
35	2568481	Cover
	3168079	Operating panel
36	2013213	Screw
37	2039010	Screw
38	2622052	Fibre washer
39	8002336	PC 2
	2548143	Bracket, left
	2548134	Bracket, right
	2622245	Mica sheet TO–126
	2624031	Spring washer TO–126
40	2542450	Bracket
41	2013062	Screw
42	2013024	Screw
43	2013024	Screw
44	2622052	Fibre washer
45	2775593	Button, 🔈 1
	2775594	Button, 🔈 2
	2775595	Button ST–AFC
	2775596	Button, MONO
	2775597	Button, TAPE
	2775598	Button, PHONO
	2775599	Button, LW
	2775600	Button, MW
	2775601	Button, FM
	2775602	Button, P1
	2775603	Button, P2
	2775604	Button, P3
	2775605	Button, P4
	2775606	Button, OFF
46	8002301	PC 6
	2548111	Bracket
	2622245	Mica sheet TO–126 (1 piece)
	2622248	Mica sheet TO–220 (5 pcs.)
	2624032	Spring washer TO-220
	2938127	Bushing TO–220
47	2039010	Screw
48	3191096	Dial, Beocenter 4600
	3191097	Dial, Beocenter 2800
49	2038216	Screw
50	8004164	PC 8
51	2038208	Screw
52	8002286	PC 3
53	2380011	Nut M3
54	2816150	Bronze spring
55	3030037	Hinge
56	3162120	Cover, MIC
57	2938081	Rubber bushing
58	2070701	Threaded pin
59	3412481	Cabinet set, teak
	3412483	Cabinet set, rosewood
60	2042205	Screw
61	2038007	Screw
62	~~3164148~~	Cover 3164334
63	2034042	Screw
64	2038235	Screw
65	3152100	Holder
66	2775516	Button, O
67	2775517	Button, M
68	6275325	Wire bundle with plug
	7500129	Contact pin
69	2038216	Screw
70	2542456	Bracket
71	2622265	Wash.
72	2038066	Screw
73	3164066	Cover
74	7500033	Fuse holder
75	3120194	Holder
76	7401001	Mains switch VOLTAGE SELECTO
77	0534104	Screen
78	2038201	Screw
79	3470078	Bracket
80	2038216	Screw
81	2514022	Clamp
82	2038201	Screw
83	2548147	Bracket
84	2013024	Screw
85	2038247	Screw
86	2643014	Clamp
87	2013200	Screw
88	8004171	PC 5
89	7210129	Socket/housing
	7500114	Contact pin (5 pcs.)
	7500129	Contact pin (2 pcs.)
90	7211049	Socket 5-contact MICROPHONE
91	7211042	Socket FM
	7211043	Socket AM
92	2641062	Locking plate
93	7211050	Socket 75 ohms AERIAL
94	7211047	Socket 2-contact
95	2038201	Screw
96	2812043	Spring
97	~~2724050~~	Wheel 2724033 cord drive pulley
98	2395031	Spire
99	2036203	Screw
100	2542471	Bracket
101	2013213	Screw
102	2042240	Screw
103	2938081	Rubber bushing
104	2622024	Washer
105	2548126	Bracket
106	2042205	Screw
107	2548129	Bracket
108	2542429	Bracket

109	2622265	Washer
110	2038066	Screw
111	2810085	Spring
112	2641061	Bushing
113	3452287	Chassis
114	4310011	Variable capacitor
	5300100	Potentiometer 100 kohms
115	8050071	Front-end unit
116	2548139	Bracket
117	2038201	Screw
118	2724000	Cord pulley
119	2993029	Screw
120	7210130	Socket/housing
	7500114	Contact pin
121	2038206	Screw
122	0335149	Spring
123	8004163	PC 7
	2011201	Screw
	2724027	Wheel
	2072706	Threaded pin
124	2038247	Screw
125	3470077	Bracket
126	2038206	Screw
127	2038214	Screw
128	2622024	Washer
129	8004165	PC 9
	3131018	Distance bushing for switch
130	2542449	Bracket
131	2622013	Washer
132	2013200	Screw
133	2542472	Bracket
134	2013024	Screw
135	2070701	Threaded pin
136	2015201	Screw
137	3412481	Cabinet set, teak
	3412483	Cabinet set, rosewood
	3412485	Cabinet set, white
138	3470079	Bracket
139	2622086	Washer
140	2042026	Screw
141	2039010	Screw
142	3302273	Screen
143	2775607	Button, ON – OFF
	2775608	Button, DOLBY-NR.
	2775609	Button, CrO_2
144	8013170	Mains transformer *

740019.

Bolts 2013017 x4

* after s/n 1536001 was 8013193

SURVEYS OF SCREWS

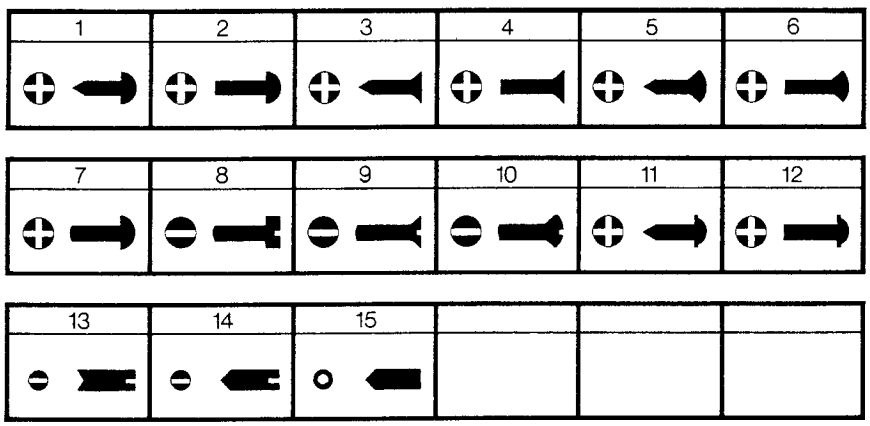

2011201	2	2.2 X 6.5 DIN 7981 BZ, black
2013000	4	2.9 X 6.5 DIN 7982 BZ
2013024	3	2.9 X 6.5 DIN 7982 B, black
2013062	11	2.9 X 6.6
2013200	1	2.9 X 6.5 DIN 7981 B
2013201	2	2.9 X 6.5 DIN 7981 BZ
2013213	1	2.9 X 9.5 DIN 7981, black
2013906	1	2.9 X 6.5 DIN 7981 B, black
2015201	4	3.5 X 9.5 DIN 7981 BZ
2033007	8	AM 1.6 X 6 DIN 84, black
2034042	8	M 2 X 3, black
2034913	8	AM 2 X 16 DIN 84
2036203	8	AM 2.6 X 4 DIN 84
2036213	8	AM 2.6 X 8 DIN 84
2038007	9	AM 3 X 6 DIN 963
2038201	8	AM 3 X 3 DIN 84
2038206	8	AM 3 X 4 DIN 84
2038208	8	AM 3 X 5 DIN 84

2038214	8	AM 3 X 8 DIN 84
2038216	8	AM 3 X 10 DIN 84
2038235	8	AM 3 X 25 DIN 84
2038247	8	AM 3 X 6 DIN 84
2039010	7	AM 3 X 6 DIN 7985, black
2039903	7	AM 3 X 5 DIN 7985
2039905	7	AM 3 X 12 DIN 7985
2042026	8	AM 4 X 75 DIN 84, black
2042205	8	AM 4 X 6 DIN 84
2042207	8	AM 4 X 8 DIN 84
2042209	8	AM 4 X 10 DIN 84
2042240	8	AM 4 X 10 DIN 84, black
2042244	8	AM 4 X 8 DIN 84, black
2070034	15	M 3 X 5 DIN 914
2070400	14	M 2 X 3 DIN 553
2070701	14	M 3 X 4 DIN 553
2072706	13	M 3 X 10 DIN 438
2072919	13	M 3 X 6 DIN 438

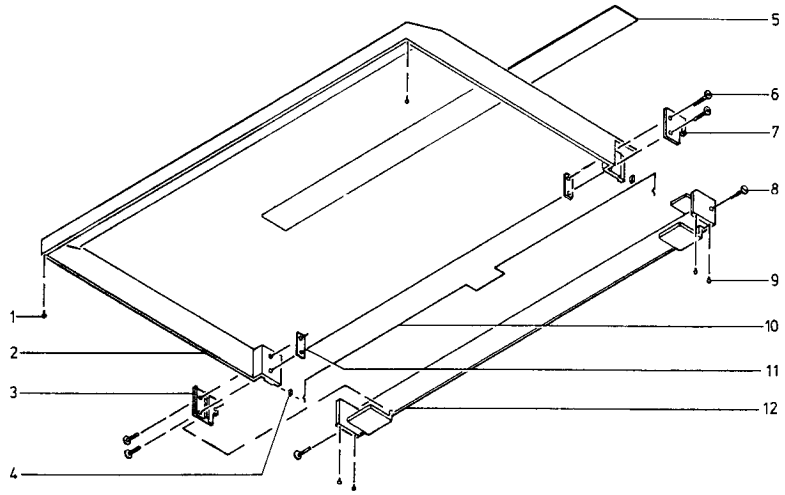

1	3010007	Stop
2	3164271	Dust cover
3	3030034	Hinge
4	3035027	Spacer
5	2560047	Decorative list, Beocenter 4600
	2560058	Decorative list, Beocenter 2800
6	2039017	Screw
7	3030035	Hinge
8	2038959	Screw
9	3341010	Stop
10	2819136	Spring
11	2643001	Clamp
12	3152218	Back plate

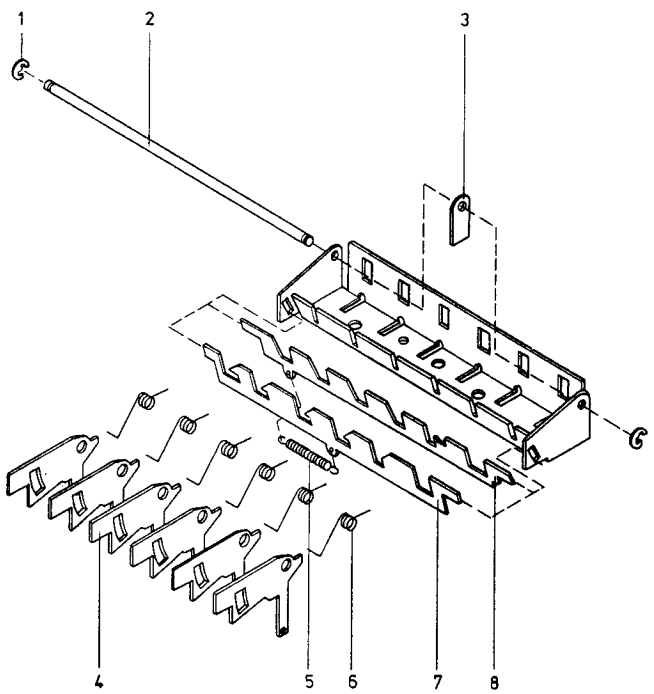

1	2390002	E-ring 3.2 ø
2	2831030	Shaft
3	3151150	Holder
4	2853054	Arm
5	2819129	Spring
6	2819130	Spring
7	2853052	Slide arm
8	2853053	Slide arm

1	2390073	E-ring 2.5 ø
2	2831018	Shaft
3	2036008	Screw AM 2.6 x 5 with washer
4	2542482	Bracket
	3010009	Stop (rubber)
5	2818025	Spring
6	3151159	Cassette holder complete
	3010013	Stop (rubber)
	2818053	Spring for eject
	2854063	Arm right (eject)
	2854064	Arm left (eject)
	2390073	E-ring 2.5 ø
	2992075	Brass tap
7	3164143	Cover
8	2726116	Turntable
9	2034239	Screw AM 2 x 12
10	2034206	Screw AM 2 x 5
11	2034036	Screw AM 2 x 4 with washer
12	7530076	Solder tag
13	8600039	Erase head
14	8600~~38~~	Tape head 8600053
15	2576052	Spacer
16	2818024	Spring
17	2576053	Spacer
18	2036012	Screw AM 2.6 x 3
19	2542363	Bracket
20	2390073	E-ring 2.5 ø
21	2917012	Ball ø3
22	2818042	Spring
23	2542426	Bracket
24	2818048	Spring
25	3112226	Tape head chassis
26	7410016	Pushbutton unit with buttons
	2775613	Pushbutton <<
	2775614	Pushbutton >>
	2775615	Pushbutton >
	2775616	Pushbutton EJECT/STOP
	2775617	Pushbutton RECORD
	2775618	Pushbutton PAUSE
	3980941	Glue for buttons
27	2794037	Roller
28	2622196	Washer
29	2389034	Special nut
30	2850086	Arm
31	2036008	Screw AM 2.6 x 5 with washer
32	7400138	Switch
33	2542485	Bracket
34	3112225	Chassis
35	2036008	Screw AM 2.6 x 5 with washer
36	2622256	Washer
37	2854029	Arm
38	2380113	Nut
39	2726060	Turntable
40	2819127	Contact spring
41	2033008	Screw AM 1.7 x 3
42	6140533	PC contact
43	2034033	Screw AM 2 x 3
44	2034033	Screw AM 2 x 3
45	2036203	Screw AM 2.6 x 4
46	2932055	Bushing
47	2548130	Bracket
48	2390073	E-ring 2.5 ø
49	2804036	Pressure wheel
50	2530332	Bracket
51	2818043	Spring
52	2034236	Screw AM 2 x 3
53	2036009	Screw AM 2.6 x 6 with washer
54	7510027	Pause contact
55	2036008	Screw AM 2.5 x 5 with screw
56	2542483	Bracket
	3010009	Stop (rubber)
57	2831029	Shaft
58	~~3370121~~	Counter 3370126
59	2819124	Spring
60	2542432	Bracket, brake
61	2034236	Screw AM 2 x 3
62	7510029	Switch
63	2036008	Screw AM 2.6 x 5 with washer
64	2542481	Bracket
65	2624035	Spring washer M2
66	2038952	Screw AM 3 x 4
67	2038063	Screw 3 x 5 with washer
68	2542486	Bracket
69	2036008	Screw AM 2.6 x 5 with washer
70	2542484	Bracket
71	8400047	Motor
72	2036014	Screw AM 2.6 x 5
73	3170117	Insulation for motor
74	2038063	Screw AM 3 x 5 with washer
75	2039908	Screw AM 3 x 10
76	2622013	Washer Ø3
77	3151160	Holder for motor
78	2624040	Washer
79	8410007	Fan blade
80	2070702	Threaded pin

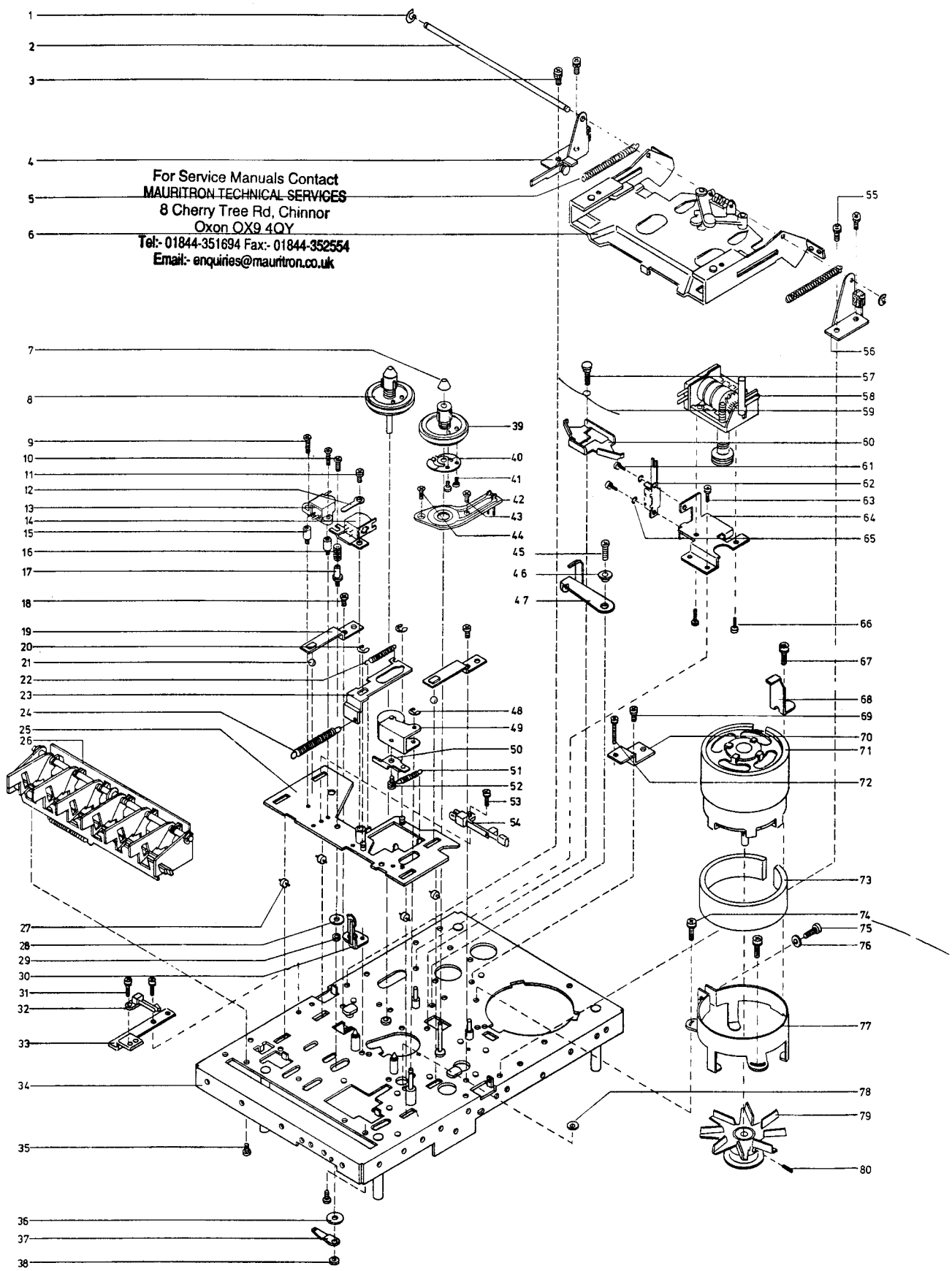

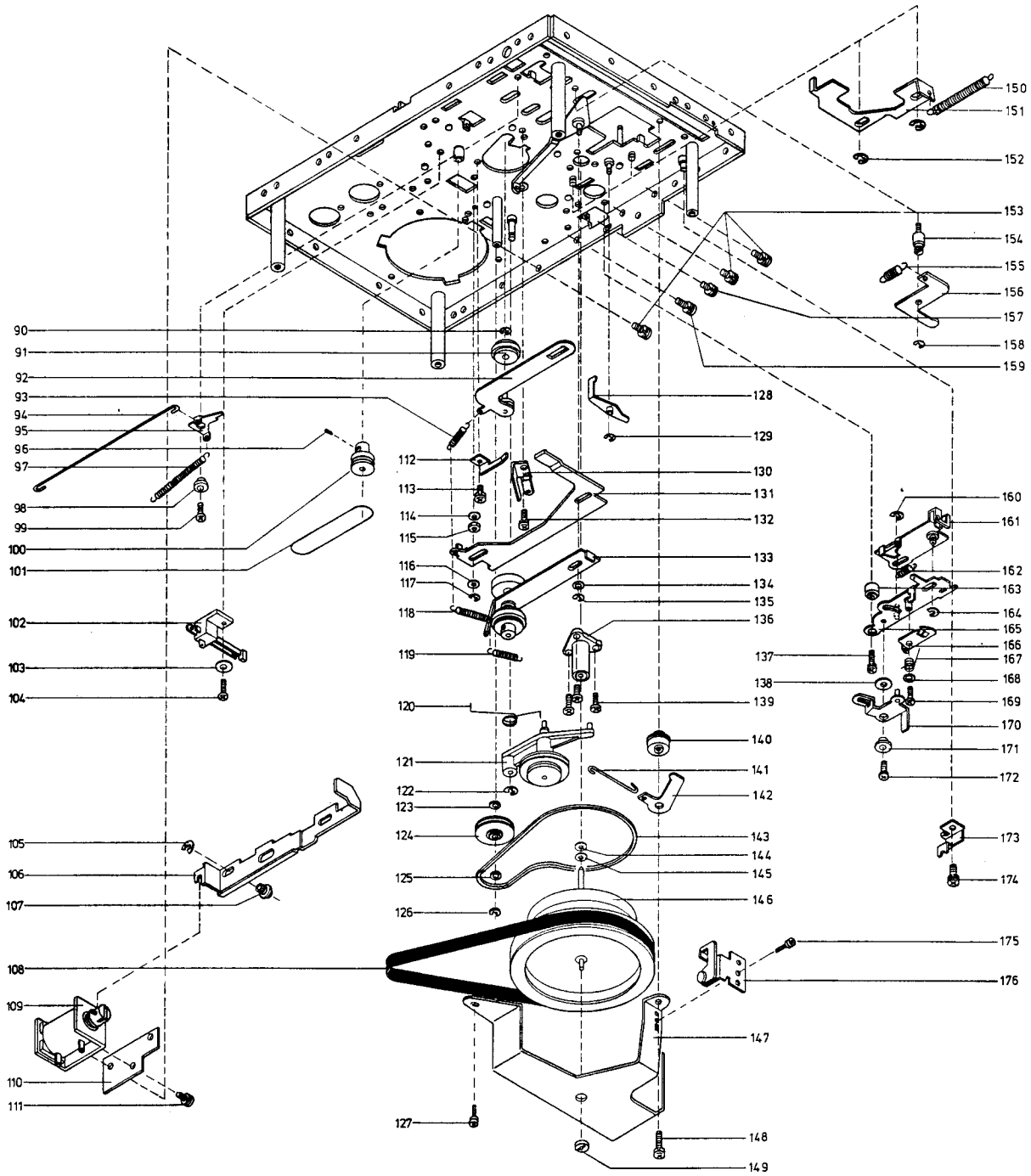
90
91
92
93
94
95
96
97
98
99
100
101
102
103
104
105
106
107
108
109
110
111
112
113
114
115
116
117
118
119
120
121
122
123
124
125
126
127
128
129
130
131
132
133
134
135
136
137
138
139
140
141
142
143
144
145
146
147
148
149
150
151
152
153
154
155
156
157
158
159
160
161
162
163
164
165
166
167
168
169
170
171
172
173
174
175
176

90	2390056	E-ring 1.5 ø
91	2804029	Idler wheel
92	2853049	Arm for idler wheel
93	2818045	Spring
94	2850056	Arm
95	2542356	Bracket
96	2072005	Threaded pin M 2 x 3
97	2818052	Spring
98	2932055	Bushing
99	2036008	Screw AM 2.6 x 5 with washer
100	2724055	Pulley
101	2732043	Belt [redacted] 4600
102	7510026	Switch
103	2622255	Washer
104	2036009	Screw AM 2.6 x 6 with washer
105	2390072	E-ring 3ø
106	2542431	Bracket
107	2932077	Bushing
108	2732042	Drive belt [redacted] TAPE MAIN
109	6840217	Magnet coil
	2818050	Spring
110	3151148	Holder for magnet coil
111	2038069	Screw AM 3 x 4 with washer
112	2816097	Guide plate spring
113	2036012	Screw AM 2.6 x 3
114	2624036	Spring washer M 2.6
115	2380113	Nut M 2.6
116	2624041	Washer, plastic
117	2390056	E-ring 1.5 ø
118	2818028	Spring
119	2818044	Spring
120	2819142	Spring
121	2854050	Clutch complete (Take up).
122	2390073	E-ring 2.5 ø
123	2624039	Washer
124	2724054	Pulley
125	2624039	Washer
126	2390056	E-ring 1.5 ø
127	2038063	Screw AM 3 x 5 with washer
128	2854048	Pause arm
129	2390056	E–RING 1.5 Ø
130	3015038	Guide plate
131	2854026	Arm
132	2036008	Screw AM 2.6 x 5 with washer
133	2853048	Arm complete
134	2641041	Washer, plastic
135	2390056	E-ring
136	2905069	Capstan bearing
137	2036010	Screw AM 2.6 x 8 with bearing
138	2622257	Washer ø4
139	2036903	Screw AM 2.6 x 5
140	2932078	Bushing
141	2850085	Arm
142	2530333	Bracket
143	2732044	Belt [redacted]
144	2622253	Washer
145	2622253	Washer
146	2794073	Flywheel
147	2518149	Bracket for flywheel
148	2036007	Screw AM 2.6 x 4 with washer
149	2905072	Bottom bearing
150	2818047	Spring
151	2854028	Arm
152	2390072	E-ring
153	2038063	Screw AM 3 x 5 with washer
154	2834058	Shaft for arm
155	2818046	Spring
156	2851066	Arm
157	2036009	Screw AM 2.6 x 6 with washer
158	2390073	E-ring 2.5 ø
159	2038063	Screw AM 3 x 5 with washer
160	2390073	E-ring 2.5 ø
161	2853051	Arm
162	2818049	Spring
163	2932079	Bushing
164	2390073	E-ring 2.5 ø
165	2542428	Bracket
166	2854051	Pause arm
167	2819126	Spring
168	2622254	Washer M2
169	2034036	Screw AM 2 x 6 with washer
170	2854049	Arm
171	2932080	Bushing
172	2034037	Screw AM 2 x 6 with washer
173	2542480	Bracket
174	2036007	Screw AM 2.6 x 4 with washer
175	2038063	Screw AM 3 x 5 with washer
176	2542479	Bracket

1	2726113	Turntable
2	2732037	Drive belt
3	3458172	Top plate
4	3320048	Holder
5	2700020	Belt for adjustment
6	5390014	Potentiometer
	6273763	Wires with socket
7	2042209	Screw AM 4 x 10 DIN 84
8	2775575	Square button
9	2640031	Clamp
10	2854042	Gear level
11	2570051	Switch arm
12	3152236	Holder
13	2039905	Screw AM 3 x 12 DIN 7985
14	2514028	Hook
15	2039905	Screw AM 3 x 12 DIN 7985
16	2622272	Washer
17	2938137	Rubber bushing
18	2930074	Bushing
19	8400093	Motor
	2722022	Pulley
20	2850084	Pickup arm complete
	8954390	Pickup MMC 3000
	3302230	Cap for pickup
21	2046910	Transport screw
22	2072707	Threaded pin AM 3 x 6
23	2938100	Bushing
24	2622228	Washer
25	2815007	Leaf spring
26	2640032	Clamp

Page 8-9, correction to pos. 25

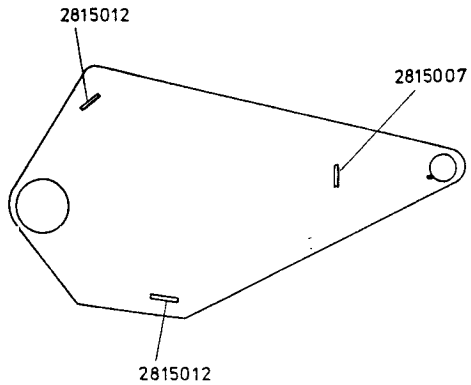

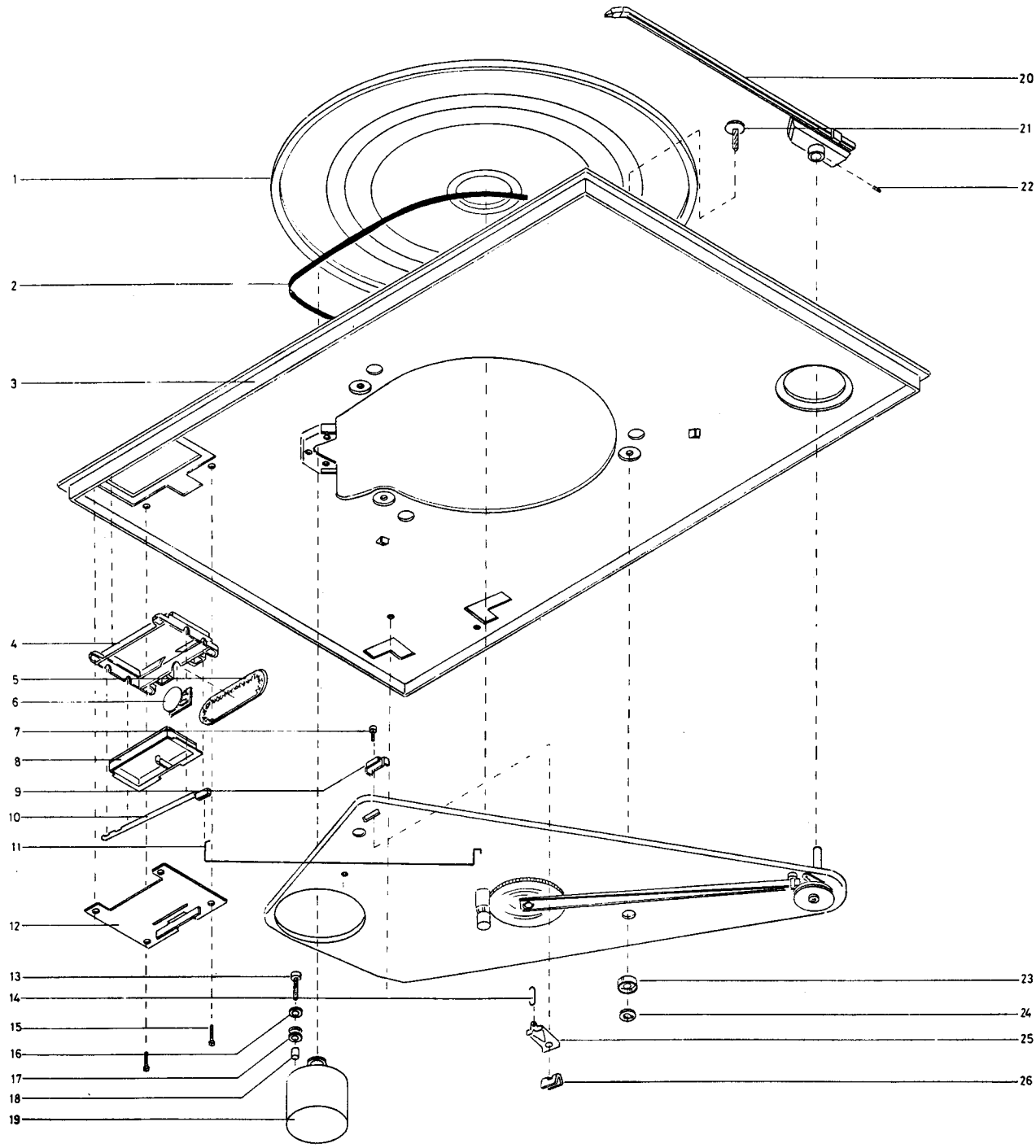

For Service Manuals Contact
MAURITRON TECHNICAL SERVICES
8 Cherry Tree Rd, Chinnor
Oxon OX9 4QY
Tel:- 01844-351694 Fax:- 01844-352554
Email:- enquiries@mauritron.co.uk

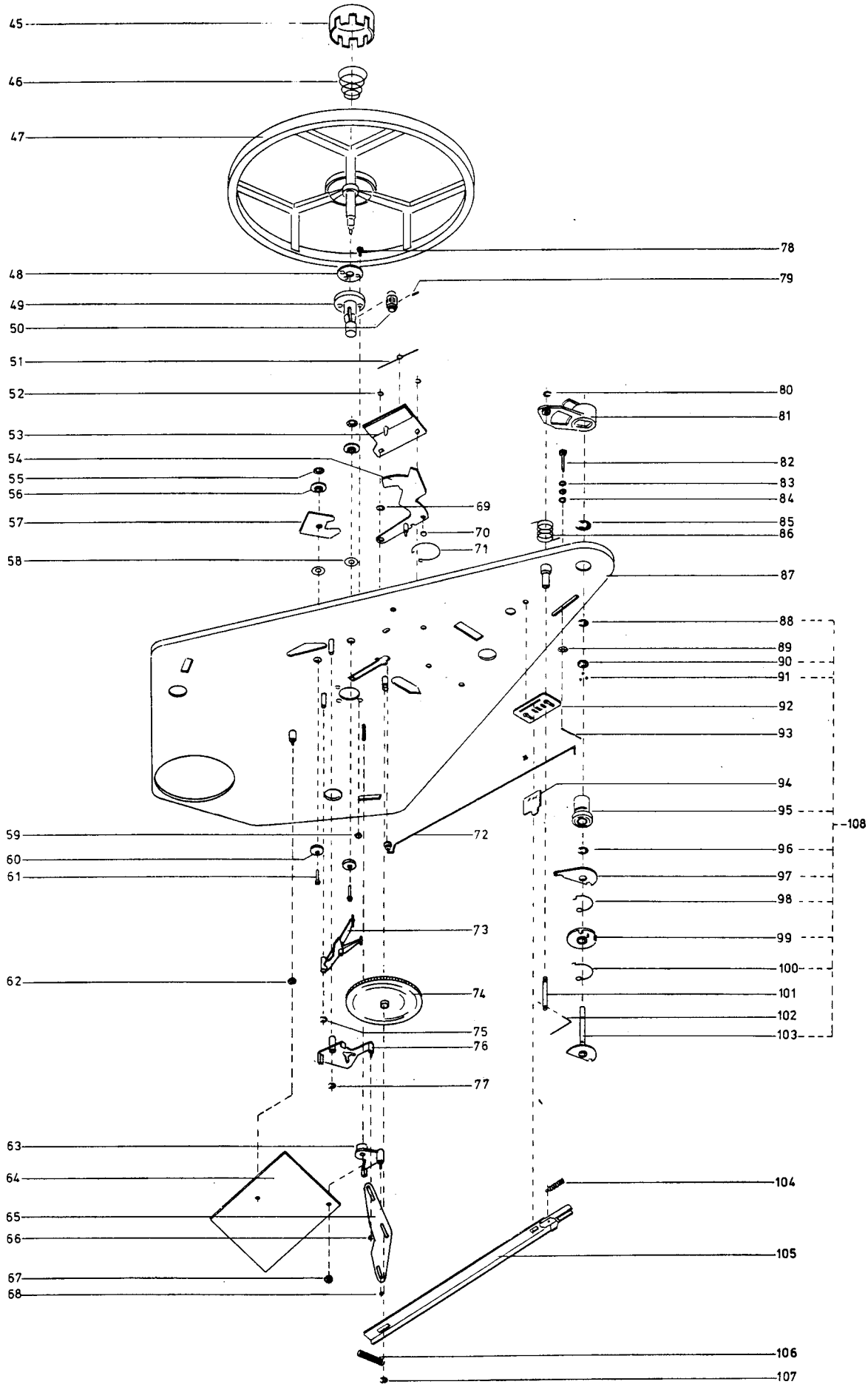
45
46
47
48
49
50
51
52
53
54
55
56
57
58
59
60
61
62
63
64
65
66
67
68
69
70
71
72
73
74
75
76
77
78
79
80
81
82
83
84
85
86
87
88
89
90
91
92
93
94
95
96
97
98
99
100
101
102
103
104
105
106
107
108

45	3014036	Adaptor
46	2818051	Spring
	2794072	Flywheel
	2622264	Cover washer (black)
	2620071	Felt washer
48	2905075	Bearing ring
49	3150037	Bearing bushing
50	2700023	Gear-wheel
51	2819141	Friction spring
52	2390002	Locking ring
53	3014037	Friction plate
54	3014031	Arm positioning guide
55	2395030	Locking ring
56	2938088	Washer
57	3014033	Arm positioning guide
58	2622198	Washer
59	2380013	Nut M3
60	2803005	Eccentric
61	2992048	Tap
62	2622263	Mica sheet
63	2853047	Release
64	8005023	PC unit
	7220132	Plug 5/4-contact
	7220133	Plug 4-contact
	7220134	Plug 2-contact
	7400115	Microswitch
	7459016	Switch
65	2851097	Switch arm
66	2390066	Locking ring
67	2380016	Nut M4
68	2390066	Locking ring
69	2622136	Washer
70	3035020	Plastic foot
71	2819075	Spring
72	2850092	Arm
73	2853055	Hammer complete
74	3017012	Cam-lifting wheel
75	2390002	Locking ring
76	2853056	Release
77	2390002	Locking ring
78	2038220	Screw AM 3 x 12 DIN 84
79	2361048	Locking pin
80	2390002	Locking ring
81	2623033	Lifting clamp
82	2992073	Tap
83	2622013	Washer
84	2620067	Washer (felt)
85	2938141	Locking ring
86	2812082	Spring
87	3110017	Chassis
	2938129	Transport bushing
88	2390033	Locking ring
89	2395030	Locking washer
90	2938114	Bushing
91	2917017	Ball
92	7459014	Contact (silent)
	7530072	Solder tag
	6270190	Signal wire
93	2810089	Spring 94A 28191
94	7459015	Contact (slide valve) spring for
95	~~2938142~~	Pile bearing 2938147
96	2390033	Locking ring
97	~~2851095~~	Arm 2851100
98	2819106	Spring
99	2750018	Clutch disc
100	2819107	Spring
101	2850093	Lifting bar
102	2530326	Bracket
103	~~2938142~~	Pile 2938148
104	~~2810090~~	Spring 2810093
105	2852032	Lifting arm
106	2810082	Spring
107	2390002	Locking ring
108	~~2938136~~	Pickup bearing complete 2938144

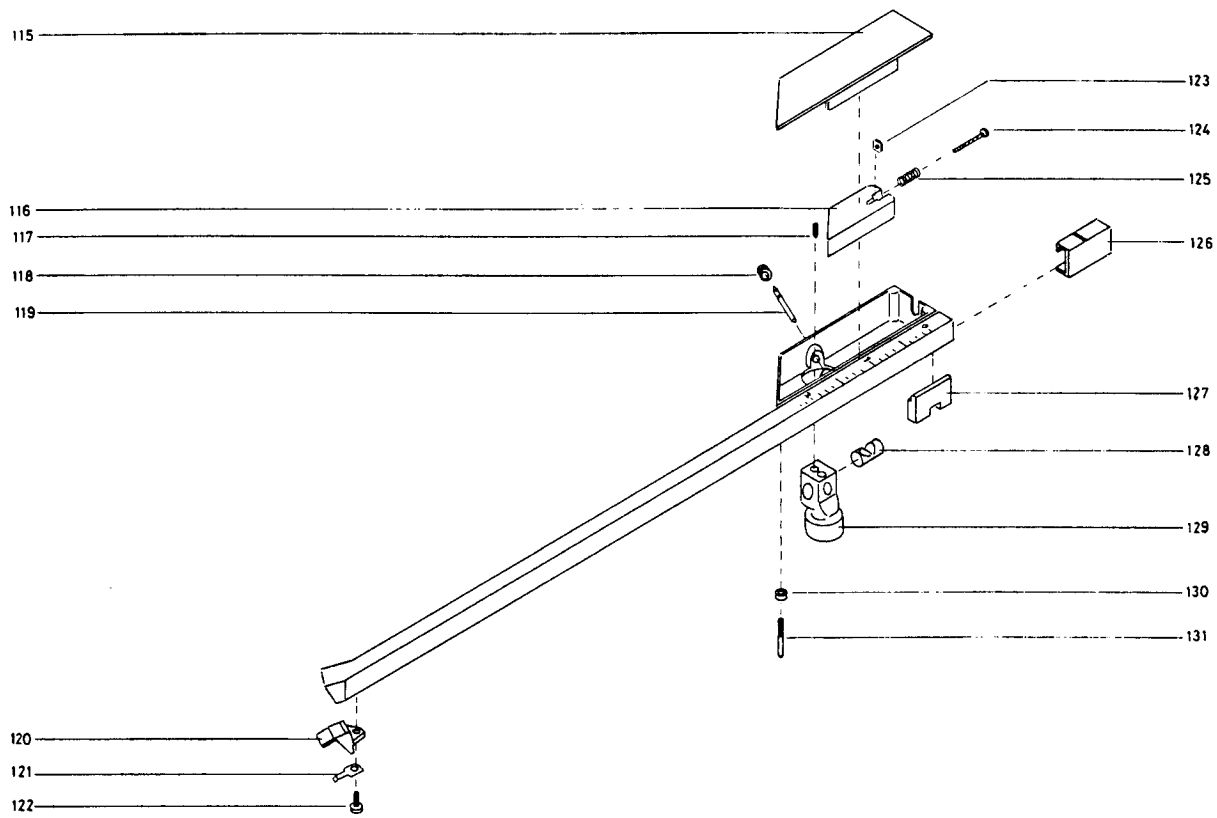

115	3162093	Cover
116	3342034	Counterweight
117	2070400	Threaded pin M 2 x 3
118	2905071	Pivot bearing
119	2834056	Shaft
120	7200037	Socket with wires
121	2816143	Chassis spring
122	2033007	Screw
123	2380068	Nut
124	2034913	Screw
125	2812072	Spring
126	3190064	Pointer
127	3342033	Counterweight
128	3151137	Holder for shaft
129	3152207	Holder for arm
130	2938096	Bushing
131	2072097	Lifting screw

PARTS NOT SHOWN

6270190	Wire with plug, PHONO signal
7210149	Socket/housing 2-contact (motor voltage)
7500114	Contact pin
6271101	Mains lead with euro-plug
7220148	Phono-plug (Aerial/Front end)
3532124	Diagramme, Beocenter 4600
3532123	Diagramme, Beocenter 2800
0585027	Rubber foot
3454134	Bottom plate, Beocenter 2800
3391480	Outer carton, Beocenter 4600
3391481	Insert, Beocenter 4600
3391482	Insert, turntable, Beocenter 4600
3397274	Foam packing, bottom, Beocenter 4600
3397275	Foam packing, cover, Beocenter 4600
3391493	Outer carton, Beocenter 2800
3397286	Foam packing, right, Beocenter 2800
3397287	Foam packing, left, Beocenter 2800
3397288	Foam packing, cover, Beocenter 2800

ELECTRICAL PARTS LIST

0R1	5300100	100 kohms TUNING FM
0R5	5370006	2 kohms ± 20 % 0,1 W lin.

0C1	4010018	1 nF 250 V	0T1	8010020	Aerial transformer
0C2	4010018	1 nF 250 V			
0C3	4010018	1 nF 250 V	0F1	6600010	4 A-T/250 V IEC 127 SLOW ANTI-SURGE Fus.
0C6	4310011	Var. capacitor			
0C7	4200361	5000 µF 35 V	0F2	6600010	4 A-T/250 V IEC 127 SLOW
0C8	4200361	5000 µF 35 V			

FRONT END, TUNER, 8050071, PC 1

R1	5001050	47 kohms ± 10 % 1/2 W	R8	5010067	560 ohms ± 5 % 1/8 W
R2	5001062	330 kohms ± 10 % 1/2 W	R9	5001013	100 ohms ± 10 % 1/2 W
R3	5001062	330 kohms ± 10 % 1/2 W	R10	5010076	3.3 kohms ± 5 % 1/8 W
R4	5001013	100 ohms ± 10 % 1/2 W	R11	5010411	47 ohms ± 5 % 1/8 W
R5	5001050	47 kohms ± 10 % 1/2 W	R12	5001038	4.7 kohms ± 10 % 1/2 W
R6	5010141	27 kohms ± 5 % 1/8 W	R13	5001013	100 ohms ± 10 % 1/2 W
R7	5010041	5.6 kohms ± 5 % 1/8 W	R14	5001040	6.8 kohms ± 10 % 1/2 W

C1	4010008	1 nF −20 +50 % 400 V	C13	4003130	47 nF ± 2 % 63 V
C2	4330001	9 pF Cer.	C14	4010015	8.2 pF ± 0,25 pF 63 V
C3	4010008	1 nF −20 +50 % 400 V	C15	4010008	1 nF −20 +50 % 400 V
C4	4330001	9 pF Cer.	C16	4010008	1 nF −20 +50 % 400 V
C5	4010008	1 nF −20 +50 % 400 V	C17	4003059	22 pF ± 5 % 250 V
C6	4010008	1 nF −20 +50 % 400 V	C18	4130081	10 nF ± 20 % 250 V
C7	4010008	1 nF −20 +50 % 400 V	C19	4000089	8.2 pF ± 0.5 pF 250 V
C8	4010008	1 nF −20 +50 % 400 V	C20	4330001	9 pF Cer.
C9	4003012	3.3 pF ± 0,25 pF 400 V	C21	4010011	8.2 pF ± 0.5 pF 400 V
C10	4330001	9 pF Cer.	C22	4101031	270 pF ± 5 % 63 V
C11	4010008	1 nF −20 +50 % 400 V	C23	4101007	220 pF ± 5 % 63 V
C12	4200107	10 µF 10 V			

L1	8020120	Aerial coil	L8	8020137	10.7 MHz
L2	8020121	RF (prim.)	L9	8020183	OSC.
L3	8020122	RF (sec.)	L10	6830052	3.8 µH ± 5 %
L4	6830052	3.8 µH ± 5 %		6702001	Ferrit-core F100 (white)
L5	6830052	3.8 µH ± 5 %		6702008	Ferrit-core F10 (red)
L6	6710001	Ferrit tube 3X1.2X3.5 mm		6479001	Glassbushing
L7	8020124	10.7 MHz			

FM, AM AND STEREO DECODER, 8002336, PC 2

R1	5010040	1 kohms ± 5 % 1/8 W	R35	5010069	3.9 kohms ± 5 % 1/8 W
R2	5010079	22 kohms ± 5 % 1/8 W	R36	5370074	10 kohms ± 20 % 0,1 W
R3	5001041	8.2 kohms ± 10 % 1/2 W	R37	5010069	3.9 kohms ± 5 % 1/8 W
R4	5001013	100 ohms ± 10 % 1/2 W	R38	5010059	10 kohms ± 5 % 1/8 W
R5	5001049	39 kohms ± 10 % 1/2 W	R39	5010046	12 kohms ± 5 % 1/8 W
R6	5001019	220 ohms ± 10 % 1/2 W	R40	5010046	12 kohms ± 5 % 1/8 W
R7	5001043	12 kohms ± 10 % 1/2 W	R41	5010065	100 ohms ± 5 % 1/8 W
R8	5001059	100 kohms ± 10 % 1/2 W	R42	5010049	100 kohms ± 5 % 1/8 W
R9	5001058	180 kohms ± 10 % 1/2 W	R43	5010049	100 kohms ± 5 % 1/8 W
R10	5010075	33 kohms ± 5 % 1/8 W	R45	5010040	1 kohms ± 5 % 1/8 W
R11	5010075	33 kohms ± 5 % 1/8 W	R46	5010040	1 kohms ± 5 % 1/8 W
R12	5001038	4.7 kohms ± 10 % 1/2 W	R48	5010054	1 Mohms ± 5 % 1/8 W
R13	5010040	1 kohms ± 5 % 1/8 W	R49	5010077	470 kohms ± 5 % 1/8 W
R15	5010072	180 kohms ± 5 % 1/8 W	R50	5001043	12 kohms ± 10 % 1/2 W
R16	5010468	15 ohms ± 5 % 1/8 W	R51	5010058	470 ohms ± 5 % 1/8 W
R17	5010064	2.2 kohms ± 5 % 1/8 W	R52	5010046	12 kohms ± 5 % 1/8 W
R20	5010048	4.7 kohms ± 5 % 1/8 W	R53	5010053	15 kohms ± 5 % 1/8 W
R21	5010046	12 kohms ± 5 % 1/8 W	R54	5010048	4.7 kohms ± 5 % 1/8 W
R22	5010079	22 kohms ± 5 % 1/8 W	R56	5010298	2.7 kohms ± 5 % 1/8 W
R23	5010044	330 ohms ± 5 % 1/8 W	R58	5010045	47 kohms ± 5 % 1/8 W
R24	5010044	330 ohms ± 5 % 1/8 W	R59	5010362	180 ohms ± 5 % 1/8 W
R25	5010044	330 ohms ± 5 % 1/8 W	R60	5010048	4.7 kohms ± 5 % 1/8 W
R26	5010077	470 kohms ± 5 % 1/8 W	R61	5010048	4.7 kohms ± 5 % 1/8 W
R27	5010066	1.8 kohms ± 5 % 1/8 W	R62	5020034	18.7 kohms ± 1 % 1/8 W
R28	5370002	500 ohms ± 20 % 0.1 W	R63	5010040	1 kohms ± 5 % 1/8 W
R29	5010041	5.6 kohms ± 5 % 1/8 W	R64	5010040	1 kohms ± 5 % 1/8 W
R30	5010059	10 kohms ± 5 % 1/8 W	R65	5010092	220 ohms ± 5 % 1/8 W
R31	5010153	1.2 kohms ± 5 % 1/8 W	R66	5010053	15 kohms ± 5 % 1/8 W
R32	5010343	1.5 Mohms ± 5 % 1/8 W	R67	5010141	27 kohms ± 5 % 1/8 W
R33	5010048	4.7 kohms ± 5 % 1/8 W	R68	5010059	10 kohms ± 5 % 1/8 W
R34	5010070	390 ohms ± 5 % 1/8 W	R69	5010053	15 kohms ± 5 % 1/8 W

PC 2 CONTD.

R70	5010045	47 kohms ± 5 % 1/8 W
R71	5010091	82 kohms ± 5 % 1/8 W
R72	5010077	470 kohms ± 5 % 1/8 W
R73	5010144	680 kohms ± 5 % 1/8 W
R74	5010076	3.3 kohms ± 5 % 1/8 W
R75	5010154	8.2 kohms ± 5 % 1/8 W
R76	5370074	10 kohms ± 20 % 0.1 W
R77	5010092	220 ohms ± 5 % 1/8 W
R78	5010091	82 kohms ± 5 % 1/8 W
R79	5010077	470 kohms ± 5 % 1/8 W
R80	5010144	680 kohms ± 5 % 1/8 W
R81	5010076	3.3 kohms ± 5 % 1/8 W
R82	5010154	8.2 kohms ± 5 % 1/8 W
R83	5010069	3.9 kohms ± 5 % 1/8 W
R84	5010120	220 kohms ± 5 % 1/8 W
R85	5010077	470 kohms ± 5 % 1/8 W
R86	5010065	100 ohms ± 5 % 1/8 W
R87	5370049	1 Mohms ± 20 % 0,1 W
R88	5010065	100 ohms ± 5 % 1/8 W
R89	5010077	470 kohms ± 5 % 1/8 W
R90	5001022	390 ohms ± 10 % 1/2 W
R91	5010120	220 kohms ± 5 % 1/8 W
R92	5001025	560 ohms ± 10 % 1/2 W
R95	5370074	10 kohms ± 20 % 0,1 W
R100	5010075	33 kohms ± 5 % 1/8 W
R101	5010045	47 kohms ± 5 % 1/8 W
R102	5010077	470 kohms ± 5 % 1/8 W
R103	5010047	120 kohms ± 5 % 1/8 W
R105	5001019	220 ohms ± 10 % 1/2 W

C1	4101018	470 pF ± 5 % 63 V
C2	4340002	2 - 22 pF
C4	4101034	150 pF ± 2.5 % 63 V
C5	4340003	5.5 - 65 pF
C6	4000016	10 pF ± 2 % 63 V
C7	4130103	0.1 µF ± 20 % 250 V
C8	4340003	5.5 - 65 pF
C9	4010063	4.7 nF ± 10 % 63 V
C10	4340002	2 - 22 pF
C11	4130103	0.1 µF ± 20 % 250 V
C12	4011025	3.3 nF ± 10 % 100 V
C13	4102111	1.5 nF ± 5 % 160 V
C14	4200171	100 µF 3 V
C15	4101026	4.7 nF ± 5 % 63 V
C16	4010060	22 nF −20 +100 % 40 V
C17	4101008	180 pF ± 5 % 63 V
C18	4130103	0.1 µF ± 20 % 250 V
C19	4130103	0.1 µF ± 20 % 250 V
C20	4130103	0.1 µF ± 20 % 250 V
C21	4200108	4.7 µF 25 V
C22	4101004	680 pF ± 1 % 63 V
C23	4101004	680 pF ± 1 % 63 V
C24	4000029	220 pF ± 5 % 63 V
C25	4010060	22 nF −20 +100 % 40 V
C27	4011025	3.3 nF ± 10 % 100 V
C28	4200169	0.1 µF 35 V
C29	4011025	3.3 nF ± 10 % 100 V
C30	4000071	270 pF ± 5 % 63 V
C33	4011025	3.3 nF ± 10 % 100 V
C34	4010041	10 nF −20 +100 % 40 V
C35	4010027	1 nF ± 10 % 100 V
C36	4010027	1 nF ± 10 % 100 V
C37	4010060	22 nF −20 +100 % 40 V
C38	4200298	1 µF 63 V
C39	4010041	10 nF −20 +100 % 40 V
C40	4010041	10 nF −20 +100 % 40 V
C41	4010060	22 nF −20 +100 % 40 V
C42	4201061	4.7 µF 63 V
C43	4000094	150 pF ± 5 % 63 V
C44	4000094	150 pF ± 5 % 63 V
C45	4010060	22 nF −20 +100 % 40 V
C46	4000029	220 pF ± 5 % 63 V
C47	4130136	1 µF ± 20 % 100 V
C49	4010041	10 nF −20 +100 % 40 V
C50	4003130	47 nF ± 2 % 63 V
C51	4200099	100 µF 16 V
C52	4200322	4.7 µF 63 V
C53	4130087	47 nF ± 10 % 250 V
C54	4101004	680 pF ± 5 % 63 V
C55	4201061	4.7 µF 63 V
C56	4201058	0.47 µF 35 V
C57	4340003	5.5 – 65 pF
C58	4100044	440 pF ± 1 % 63 V
C59	4130104	0.22 µF ± 20 % 100 V
C60	4130114	0.47 µF ± 10 % 100 V
C61	4200333	1 µF 63 V
C62	4100081	2.15 nF ± 2.5 % 63 V
C63	4100077	196 pF ± 2.5 % 63 V
C64	4100078	4.02 nF ± 2.5 % 63 V
C65	4100080	866 pF ± 2.5 % 63 V
C66	4100079	590 pF ± 2.5 % 63 V
C67	4130089	22 nF ± 10 % 250 V
C68	4201035	2.2 µF 63 V
C69	4200333	1 µF 63 V
C70	4100081	2.15 nF ± 2.5 % 63 V
C71	4100077	196 pF ± 2.5 % 63 V
C72	4100078	4.02 nF ± 2.5 % 63 V
C73	4100080	866 pF ± 2.5 % 63 V
C74	4100079	590 pF ± 2.5 % 63 V
C75	4130089	22 nF ± 10 % 250 V
C76	4201035	2.2 µF 63 V
C77	4200304	470 µF 40 V
C78	4201057	1 µF 35 V
C79	4130103	0.1 µF ± 20 % 250 V
C80	4130103	0.1 µF ± 20 % 250 V
C81	4200108	4.7 µF 25 V

L1	8020262	MW OSC.
L2	8020261	LW OSC.
L3	8020219	LW RF.
L4	8020106	MW RF
L5	8020222	468 kHz filter
L6	8020114	468 kHz filter
L7	8020263	AM IF
L8	8020224	AM IF
L9	8020264	AM IF
L10	8020265	AM DET.
L11	8010141	FM DET.
L12	8022079	78 mH
L13	8022079	78 mH
L14	8022079	78 mH
L15	8022079	78 mH
L16	8022066	114 kHz

BP1	8030001	10.7 MHz filter
BP2	8030001	10.7 MHz filter
BP3	8030001	10.7 MHz filter
X1	8030006	468 kHz filter
X2	8030006	468 kHz filter
	7400160	Pushbutton switch SWITCH BANK
X	7450043	Mains switch on/off. X
	3333012	Spacer for 2C77

FM PRESET, 8002286, PC 3

R1	5320017	100 kohms	R3	5320017	100 kohms
R2	5320017	100 kohms	R4	5320017	100 kohms

TONE CONTROL AND PRE-AMPLIFIER, 8002318, PC 4

R1	5010611	150 ohms ± 5 % 1/8 W	R121	5010066	1.8 kohms ± 5 % 1/8 W
R100	5010092	220 ohms ± 5 % 1/8 W	R122	5010041	5.6 kohms ± 5 % 1/8 W
R101	5010045	47 kohms ± 5 % 1/8 W	R123	5310074	2X22 kohms TREBLE
R102	5010083	270 kohms ± 5 % 1/8 W	R124	5010063	150 kohms ± 5 % 1/8 W
R103	5010066	1.8 kohms ± 5 % 1/8 W	R125	5010076	3.3 kohms ± 5 % 1/8 W
R104	5010048	4.7 kohms ± 5 % 1/8 W	R126	5310074	2X22 kohms BASS
R105	5010047	120 kohms ± 5 % 1/8 W	R127	5010066	1.8 kohms ± 5 % 1/8 W
R106	5010058	470 ohms ± 5 % 1/8 W	R128	5010041	5.6 kohms ± 5 % 1/8 W
R107	5010044	330 ohms ± 5 % 1/8 W	R129	5010040	1 kohms ± 5 % 1/8 W
R108	5010362	180 ohms ± 5 % 1/8 W	R131	5010048	4.7 kohms ± 5 % 1/8 W
R109	5020019	36 kohms ± 2 % 1/8 W	R132	5010063	150 kohms ± 5 % 1/8 W
R110	5010120	220 kohms ± 5 % 1/8 W	R133	5010079	22 kohms ± 5 % 1/8 W
R112	5010049	100 kohms ± 5 % 1/8 W	R134	5010079	22 kohms ± 5 % 1/8 W
R117	5011078	4.7 Mohms ± 5 % 1/4 W	R135	5010611	150 ohms ± 5 % 1/8 W
R118	5010041	5.6 kohms ± 5 % 1/8 W	R136	5310040	2X22 kohms VOL.
R119	5010059	10 kohms ± 5 % 1/8 W	R137	5010065	100 ohms ± 5 % 1/8 W
R120	5011071	1.5 Mohms ± 5 % 1/4 W	R138	5310073	2X22 kohms BAL.

C1	4200299	220 µF 40 V	C112	4130109	10 nF ± 10 % 250 V
C100	4200296	2.2 µF 63 V	C113	4010024	470 pF ± 10 % 100 V
C101	4010021	220 pF ± 10 % 100 V	C114	4130109	10 nF ± 10 % 250 V
C102	4130100	68 nF ± 10 % 250 V	C115	4130100	68 nF ± 10 % 250 V
C104	4000078	68 pF ± 2 % 63 V	C116	4130100	68 nF ± 10 % 250 V
C105	4200296	2.2 µF 63 V	C117	4201065	10 µF 63 V
C106	4010065	2.7 nF ± 10 % 63 V	C118	4010027	1 nF ± 10 % 100 V
C107	4130109	10 nF ± 10 % 250 V	C120	4201065	10 µF 63 V
C110	4200296	2.2 µF 63 V	C121	4200296	2.2 µF 63 V
C111	4201035	2.2 µF 63 V	C122	4200299	220 µF 40 V

722 0131
~~722031~~ Socket 3 pol.

AUTO. STOP, 8004171, PC 5

R1	5001034	2.2 kohms ± 10 % 1/2 W	R8	5010053	15 kohms ± 5 % 1/8 W
R2	5001042	10 kohms ± 10 % 1/2 W	R9	5010052	6.8 kohms ± 5 % 1/8 W
R3	5010054	1 Mohms ± 5 % 1/8 W	R10	5010060	39 kohms ± 5 % 1/8 W
R4	5010045	47 kohms ± 5 % 1/8 W	R11	5001063	150 kohms ± 5 % 1/8 W
R5	5001029	1 kohms ± 10 % 1/2 W	R12	5010052	6.8 kohms ± 5 % 1/8 W
R6	5010066	1.8 kohms ± 5 % 1/8 W	R13	5001033	1.8 kohms ± 10 % 1/2 W
R7	5001044	15 kohms ± 10 % 1/2 W	R14	5001024	470 ohms ± 10 % 1/2 W

C1	4201069	2.2 µF 35 V	F1	6604023	1 A-F IEC 127 QUICK
C2	4200100	22 µF 40 V		7500002	Fuse holder
C3	4201065	10 µF 63 V			

OUTPUT AMP. AND POWER SUPPLY, 8002301, PC 6

R3	5001019	220 ohms ± 10 % 1/2 W	R110	5010039	68 ohms ± 5 % 1/8 W
R4	5002024	1 kohms ± 10 % 1 W	R111	5010092	220 ohms ± 5 % 1/8 W
R6	5010611	150 ohms ± 5 % 1/8 W	R112	5010079	22 kohms ± 5 % 1/8 W
R10	5010059	10 kohms ± 5 % 1/8 W	R113	5010070	390 ohms ± 5 % 1/8 W
R11	5010076	3.3 kohms ± 5 % 1/8 W	R114	5010053	15 kohms ± 5 % 1/8 W
R12	5010064	2.2 kohms ± 5 % 1/8 W	R116	5010039	68 ohms ± 5 % 1/8 W
R14	5010074	680 kohms ± 5 % 1/8 W	R117	5001041	8.2 kohms ± 10 % 1/2 W
R15	5010074	680 kohms ± 5 % 1/8 W	R118	5001041	8.2 kohms ± 10 % 1/2 W
R16	5010058	470 ohms ± 5 % 1/8 W	R119	5010144	680 ohms ± 5 % 1/8 W
R17	5010117	330 kohms ± 5 % 1/8 W	R120	5010000	270 ohms ± 5 % 1/8 W
R18	5010058	470 ohms ± 5 % 1/8 W	R121	5010000	270 ohms ± 5 % 1/8 W
R19	5010077	470 kohms ± 5 % 1/8 W	R122	5010040	1 kohms ± 5 % 1/8 W
R100	5010045	47 kohms ± 5 % 1/8 W	R123	5010065	100 ohms ± 5 % 1/8 W
R101	5010045	47 kohms ± 5 % 1/8 W	R124	5370174	250 ohms ± 20 % 0.1 W
R102	5010076	3.3 kohms ± 5 % 1/8 W	R125	5102007	0.39 ohms ± 10 % 1 W
R103	5010040	1 kohms ± 5 % 1/8 W	R126	5010000	270 ohms ± 5 % 1/8 W
R104	5010079	22 kohms ± 5 % 1/8 W	R127	5102007	0.39 ohms ± 10 % 1 W
R105	5010053	15 kohms ± 5 % 1/8 W	R128	5000085	4.7 ohms ± 10 % 1/2 W
R106	5010044	330 ohms ± 5 % 1/8 W	R129	5011074	2.2 Mohms ± 10 % 1/4 W
R107	5010144	680 ohms ± 5 % 1/8 W	R130	5010065	100 ohms ± 5 % 1/8 W
R108	5010403	27 ohms ± 5 % 1/8 W			

PC 6 CONTD.

C3	4130114	0.47 µF ± 10 % 100 V
C4	4200373	1000 µF 63 V
C5	4130029	0.47 µF ± 10 % 250 V
C6	4130029	0.47 µF ± 10 % 250 V
C8	4130029	0.47 µF ± 10 % 250 V
C9	4130029	0.47 µF ± 10 % 250 V
C10	4201060	100 µF 40 V
C11	4011022	4.7 nF −20 +100 % 40 V
C12	4200092	47 µF 16 V
C13	4130136	1 µF ± 20 % 100 V
C14	4130136	1 µF ± 20 % 100 V
C15	4011022	4.7 nF -20 +100 % 40 V
C100	4200298	1 µF 63 V
C101	4130029	22 nF ± 20 % 250 V
C102	4010027	1 nF ± 10 % 100 V
C103	4011022	4.7 nF −20 +100 % 40 V
C105	4200092	47 µF 16 V
C106	4000057	47 pF ± 5 % 63 V
C107	4011022	4.7 nF −20 +100 % 40 V
C108	4130029	22 nF ± 20 % 250 V
C110	4130104	0.22 µF ± 20 % 100 V
C111	4130104	0.22 µF ± 20 % 100 V

L1	8022080	2.5 mH
L100	6850114	0.5 µH

MIC. PRE-AMP., 8004163, PC 7

R1	5010059	10 kohms ± 5 % 1/8 W
R2	5010065	100 kohms ± 5 % 1/8 W
R3	5010120	220 kohms ± 5 % 1/8 W
R4	5010092	220 ohms ± 5 % 1/8 W
R5	5010040	1 kohms ± 5 % 1/8 W
R6	5010075	33 kohms ± 5 % 1/8 W
R7	5010046	12 kohms ± 5 % 1/8 W
R8	5010048	4.7 kohms ± 5 % 1/8 W
R9	5010044	330 ohms ± 5 % 1/8 W
R10	5010049	100 kohms ± 5 % 1/8 W
R11/ R12	5310040	2X20 kohms
R13	5001038	4.7 kohms ± 10 % 1/2 W
R14	5370128	100 kohms ± 20 % 0.1 W
R15	5011083	10 Mohms ± 10 %
R16	5011068	820 kohms ± 5 % 1/4 W
R17	5010128	120 ohms ± 5 % 1/8 W
R18	5010049	100 kohms ± 5 % 1/8 W
R19	5010153	1.2 kohms ± 5 % 1/8 W
R20	5010054	1 Mohms ± 5 % 1/8 W
R21	5100255	270 ohms ± 10 % 5 W
R22	5010053	15 kohms
R23	5010079	22 kohms
R24	5010065	100 ohms ± 5 % 1/8 W
R25	5010065	100 ohms ± 5 % 1/8 W

C1	4200296	2.2 µF 63 V
C2	4010027	1 nF ± 10 % 100 V
C3	4000069	100 pF ± 5 % 63 V
C4	4200380	1 µF 63 V
C5	4201074	47 µ40 V
C6	4201035	2.2 µF 63 V
C7	4000057	47 pF
C8	4130103	100 nF ± 20 % 250 V
C9	4201035	2.2 µF 63 V
C10	4201058	0.47 µF 35 V

7210159	Mic. socket
7500113	Contact pin

INDICATOR, 8004164, PC 8

R1	5001026	680 ohms ± 10 % 1/2 W
	6275357	Wire bundle with socket
	7500114	Contact pin for socket

TAPE AMPLIFIER, 8004165, PC 9

R1	5010075	33 kohms ± 5 % 1/8 W
R2	5010075	33 kohms ± 5 % 1/8 W
R3	5010048	4.7 kohms ± 5 % 1/8 W
R4	5001004	22 ohms ± 10 % 1/2 W
R5	5001028	1 kohms ± 5 % 1/2 W
R6	5001028	1 kohms ± 5 % 1/2 W
R7	5001048	33 kohms ± 10 % 1/2 W
R8	5001042	10 kohms ± 10 % 1/2 W
R9	5001026	680 ohms ± 10 % 1/2 W
R10	5001026	680 ohms ± 10 % 1/2 W
R11	5001002	15 ohms ± 10 % 1/2 W
R12	5001021	330 ohms ± 10 % 1/2 W
R13	5010040	1 kohms ± 5 % 1/8 W
R14	5010059	10 kohms ± 5 % 1/8 W
R15	5010059	10 kohms ± 5 % 1/8 W
R16	5010079	22 kohms ± 5 % 1/8 W
R17	5010040	1 kohms ± 5 % 1/8 W
R100	5010362	180 ohms ± 5 % 1/8 W
R101	5370152	10 kohms ± 20 % 0.1 W
R102	5010265	3.3 kohms ± 2 % 1/4 W
R103	5010045	47 kohms ± 5 % 1/8 W
R104	5010079	22 kohms ± 5 % 1/8 W
R105	5010049	100 kohms ± 5 % 1/8 W
R106	5010063	150 kohms ± 5 % 1/8 W
R107	5010083	270 kohms ± 5 % 1/8 W
R108	5010362	180 ohms ± 5 % 1/8 W
R109	5010077	470 kohms ± 5 % 1/8 W
R110	5010074	680 kohms ± 5 % 1/8 W
R111	5010092	220 ohms ± 5 % 1/8 W
R112	5010065	100 ohms ± 5 % 1/8 W
R113	5010092	220 ohms ± 5 % 1/8 W
R114	5370150	500 ohms ± 20 % 0.1 W
R115	5010045	47 kohms ± 5 % 1/8 W
R116	5010048	4.7 kohms ± 5 % 1/8 W
R117	5010076	3.3 kohms ± 5 % 1/8 W
R118	5010120	220 kohms ± 5 % 1/8 W
R119	5010040	1 kohms ± 5 % 1/8 W
R120	5010065	100 ohms ± 5 % 1/8 W
R121	5010120	220 kohms ± 5 % 1/8 W
R122	5010048	4.7 kohms ± 5 % 1/8 W
R123	5010061	56 kohms ± 5 % 1/8 W
R124	5010041	5.6 kohms ± 5 % 1/8 W
R125	5010064	2.2 kohms ± 5 % 1/8 W
R126	5001038	4.7 kohms ± 10 % 1/2 W
R127	5010092	220 ohms ± 5 % 1/8 W
R128	5010072	180 kohms ± 5 % 1/8 W
R129	5010065	100 ohms ± 5 % 1/8 W
R130	5010068	820 ohms ± 5 % 1/8 W

PC 9 CONTD.

R131	5010075	33 kohms ± 5 % 1/8 W
R132	5010448	22 ohms ± 5 % 1/8 W
R133	5010056	82 ohms ± 5 % 1/8 W
R134	5010247	1.5 kohms ± 5 % 1/8 W
R135	5001024	470 ohms ± 10 % 1/2 W
R136	5010076	3.3 kohms ± 5 % 1/8 W
R137	5010154	8.2 kohms ± 5 % 1/8 W
R138	5370059	250 ohms ± 20 % 0.1 W
R139	5010047	120 kohms ± 5 % 1/8 W
R140	5010045	47 kohms ± 5 % 1/8 W
R141	5010120	220 kohms ± 5 % 1/8 W
R142	5370153	25 kohms ± 20 % 0.1 W
R143	5010062	68 kohms ± 5 % 1/8 W

C1	4130099	1.3 µF ± 10 % 170 V
C2	4130103	100 nF ± 20 % 250 V
C3	4200097	220 µF 16 V
C4	4000069	100 pF ± 5 % 63 V
C5	4201069	2.2 µ 35 V
C6	4201058	0.47 µ 35 V
C7	4130103	100 n ± 20 % 250 V
C8	4201065	10 µ 63 V
C9	4100049	5.6 n ± 1 % 63 V
C10	4201058	0.47 µ 35 V
C100	4100049	5.6 n ± 1 % 63 V
C101	4201065	10 µ 63 V
C102	4100031	4.7 n ± 1 % 63 V
C103	4100048	27 n ± 1 % 63 V
C104	4100029	2.2 n ± 5 % 63 V
C105	4100033	3.3 nF ± 5 % 63 V
C106	4100033	3.3 nF ± 5 % 63 V
C107	4200333	1 µ 63 V
C108	4201061	4.7 µ 63 V
C109	4201065	10 µ 63 V
C110	4201074	47 µ 40 V
C111	4010021	220 p ± 10 % 100 V
C112	4130102	330 n ± 20 % 250 V
C113	4130103	100 n ± 20 % 250 V
C114	4130087	47 n ± 10 % 250 V
C115	4201061	4.7 µ 63 V
C116	4010027	1 n ± 10 % 100 V
C117	4130089	22 nF ± 10 % 250 V
C118	4000057	47 p ± 5 % 63 V
C119	4200098	100 µ 10 V
C120	4130097	15 n ± 10 % 250 V
C121	4201074	47 µ 40 V
C122	4201065	10 µ 63 V
C123	4200100	22 µ 40 V
C124	4201069	2.2 µ 35 V
C125	4010027	1 n ± 10 % 100 V
C126	4010021	220 p ± 10 % 100 V
C127	4200098	100 µ 10 V
C128	4201065	10 µ 63 V
C129	4200325	1 µ 35 V
C130	4130088	33 n ± 10 % 250 V
C131	4010021	220 p ± 10 % 100 V
C132	4010063	4.7 nF ± 10 % 63 V
C133	4010021	220 pF ± 10 % 100 V

L1	8020267
L100	8022067
L101	8022068

~~L102 8022043~~ L102 8022090.
~~L103 8022043~~ L202
New Code No's for record switches after S/N 1624001 see page 7-3

	7400159	Pushbutton unit
	7450044	Mains switch To go on/off
	7400131	Record switch with spring
	7400130	Record switch without spring
	7220117	Socket 11 pol.
	7220116	Socket 7 pol.
	~~3131018~~	Spacer for record switch NOT AVAILABLE

MOTOR CONTROL, 8005023, PC 15

R1	5010000	270 ohms ± 5 % 1/8 W
R2	5020114	11.5 kohms ± 1 % 1/8 W
R3	5020116	7.87 kohms ± 1 % 1/8 W
R4	5370173	2.5 kohms ± 20 % 0.1 W
R5	5370173	2.5 kohms ± 20 % 0.1 W
R6	5010068	820 ohms ± 5 % 1/8 W
R7	5010045	47 kohms ± 5 % 1/8 W
R8	5100023	10 ohms ± 10 % 1 W
R9	5010060	39 kohms ± 5 % 1/8 W
R10	5010091	82 kohms ± 5 % 1/8 W

C1	4201029	470 µF 40 V
C2	4100098	68 nF ± 2.5 % 63 V
C3	4201057	1 µF 35 V
C4	4201081	10 µF 63 V
C5	4201061	4.7 µF 63 V
C6	4010060	22 nF 40 V
C7	4010027	1 nF ± 10 % 100 V
C8	4010060	22 nF 40 V
C9	4201058	0.47 µF 35 V
C10	4130103	100 nF ± 20 % 250 V
C11	4130087	47 nF ± 10 % 250 V

F1	6600028	315 mA-T/250 V SLOW

P1	7220132	Plug 5/4 pins
P2	7220134	Plug 2 pins
P3	7220133	Plug 4 pins
S1	7459016	Switch
S2	7400115	Micro switch

TRANSISTOR AND IC LIST

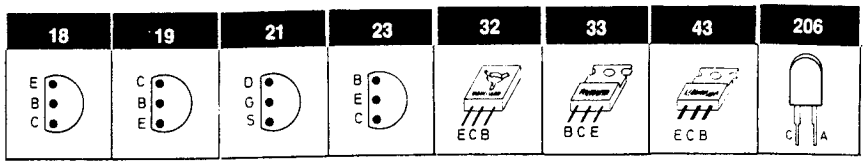

1TR1	8320119	**21**	TIS 88 A
1TR2			
1TR3	8320136	**21**	TIS 88-3IC2
		21	SPF 2060
1TR4	8320112	**23**	BF 495
		23	BF 255
2TR1	8320108	**18**	BC 548 B
2TR2		**18**	BC 172 B
		18	BC 183 B
		18	BC 238 B
2TR3	8320324	**19**	MPSA 55
2TR4	8320108	**18**	BC 548 B
		18	BC 172 B
		18	BC 183 B
		18	BC 238 B
2TR5	8320311	**23**	BF 240
2TR6	8320239	**32**	BD 135
2TR7	8320097	**18**	BC 547 B
		18	BC 182 B
		18	BC 237 B
		18	BC 171 B
2TR8	8320285	**18**	BC 548 B
2TR9		**18**	BC 183 C
2TR10	8320097	**18**	BC 547 B
2TR11		**18**	BC 182 B
2TR12		**18**	BC 237 B
		18	BC 171 B
2IC1	8340031		TCA 440
2IC2	8340033		TCA 420 A
2IC3	8340090		TCA 750
2IC4	8340103		MC 1310
			CA 1310 E
			MC 1310 N
2IC5	8340054	**19**	MPSA 13
2IC6		**19**	TPSA 13
4TR100/200	8320344	**18**	BC 550 B
		18	BC 384 B
4TR 200	8320366		mmPSH 54.
4TR101/201	8320097	**18**	BC 547 B
		18	BC 182 B
		18	BC 237 B
		18	BC 171 B
4IC100/200	8340054	**19**	MPSA 13
4IC101/201		**19**	TPSA 13
5TR1	8320152	**18**	BC 557 B
5TR2		**18**	BC 212 B
5TR3		**18**	BC 251 B
		18	BC 307 B
5TR4	8320323	**19**	MPSA 05
5TR5	8320292	**32**	BD 137
6TR1	8320296	**43**	BD 226
6TR3	8320152	**18**	BC 557 B
		18	BC 212 B
		18	BC 251 B
		18	BC 307 B
6TR4	8320097	**18**	BC 547 B
6TR5		**18**	BC 182 B
6TR101/201		**18**	BC 237 B
		18	BC 171 B
6TR 102/200	8320366		
6TR102/202	8320323	**19**	MPSA 05
6TR103/203	8320097	**18**	BC 547 B
		18	BC 182 B
		18	BC 237 B
		18	BC 171 B
6TR104/204	8320377	**18**	BC 547 B
6TR105/205		**18**	BC 182 C
6TR106/206	8320152	**18**	BC 557 B
		18	BC 212 B
		18	BC 251 B
		18	BC 307 B
6TR107/207	8320323	**19**	MPSA 05
6TR108/208	8320097	**18**	BC 547 B
6TR109/209		**18**	BC 182 B
		18	BC 237 B
		18	BC 171 B
6TR110/210	8320383	**32**	ON 595
		32	BD 165 S
		32	BO 135
		32	BD 135
6IC1	8340126		UA78M 24C4

6IC100/200	8340117	**33**	BDX 33A
			RCA 17424
6IC101/201	8340118	**33**	BDX 34A
			RCA 17425
7TR1	8340344	**18**	BC 550B
		18	BC 348 B
7IC1	8340054	**19**	MPSA 13
7IC2		**19**	TPSA 13
8IC1	8340097		UAA 180
9TR1	8320237	**18**	BC 546 B
9TR2			
9TR3	8320137	**18**	BC 182 B
9TR4			

9TR100/200	8320344	**18**	BC 550 B
		18	BC 348 BN
9TR101/201	8320095	**18**	BC 549 B
9TR102/202		**18**	BC 184 BN
9TR103/203	8320097	**18**	BC 547 B
		18	BC 182 B
		18	BC 237 B
		18	BC 171 B
9IC100/200	8340046		NE 545 B
	DOLBY I/C.		
1STR1	8320266	**33**	TIP 31
15IC1	8340108		C 1003

OC6. VARICAP. TUNING. CAP. - 4310011.

DIODE LIST

0D1	8300256	**206**	CQX 11
STEREO LED GREEN LAMP.			
0D2-0D4	8300255	**206**	CQX 10
TUNING LED RED LAMP.			
1D1	8300041		BB 103 green
1D2	8300050		BB 103 blue
1D3	8300041		BB 103 green
2D1	8300058		1N 4148
			SFD 184
2D2	8300024		AA 119
2D3-D9	8300058		1N 4148
			SFD 184
2D10	8300283		6.4 V 5 %
2D11-D13	8300058		1N 4148
5D1-D2			SFD 184
5D3	8300023		1N 4002
6D1	831 0020		
	mains rectifier		
6D2	8300028		ZPD 9.1 V
			BZX 79C 9.1 V
			BZX 83C 9.1 V
6D3-D6	8300023		1N 4002
6D7	8310020		B80C 3200/2200
	MAINS RECTIFIER.		
6D8-D9	8300058		1N 4148
			SFD 184
6D100/	8300029		ZPD 12 V
200			BZX 79C 12 V
			BZX 83C 12 V

6D101/	8300058	1N 4148
201		SFD 184
6D102/		SFD 184
202		
6SCS1	8300230	2N 6342 AW
	TRIAC	
7D1-D2	8300058	1N 4148
		SFD 184
7D3	8300034	ZY 12
8D1-D2	8300255 **206**	CQX 10
8D3-D8	8300256 **206**	CQX 11
8D9	8300255 **206**	CQX 10
9D1	8300028	9.1 V 5 %
9D2	8300058	1N 4148
		SFD 184
9D100/	8300042	OA 91
200		
9D101/	8300058	1N 4148
201		SFD 184
15D1-D4	8300023	1N 4002
15D5	8300029	ZPD 12 V
		BZX 79C 12 V
		BZX 83C 12 V

Bang & Olufsen

TAPE AMPLIFIER, 8004165, PC 9

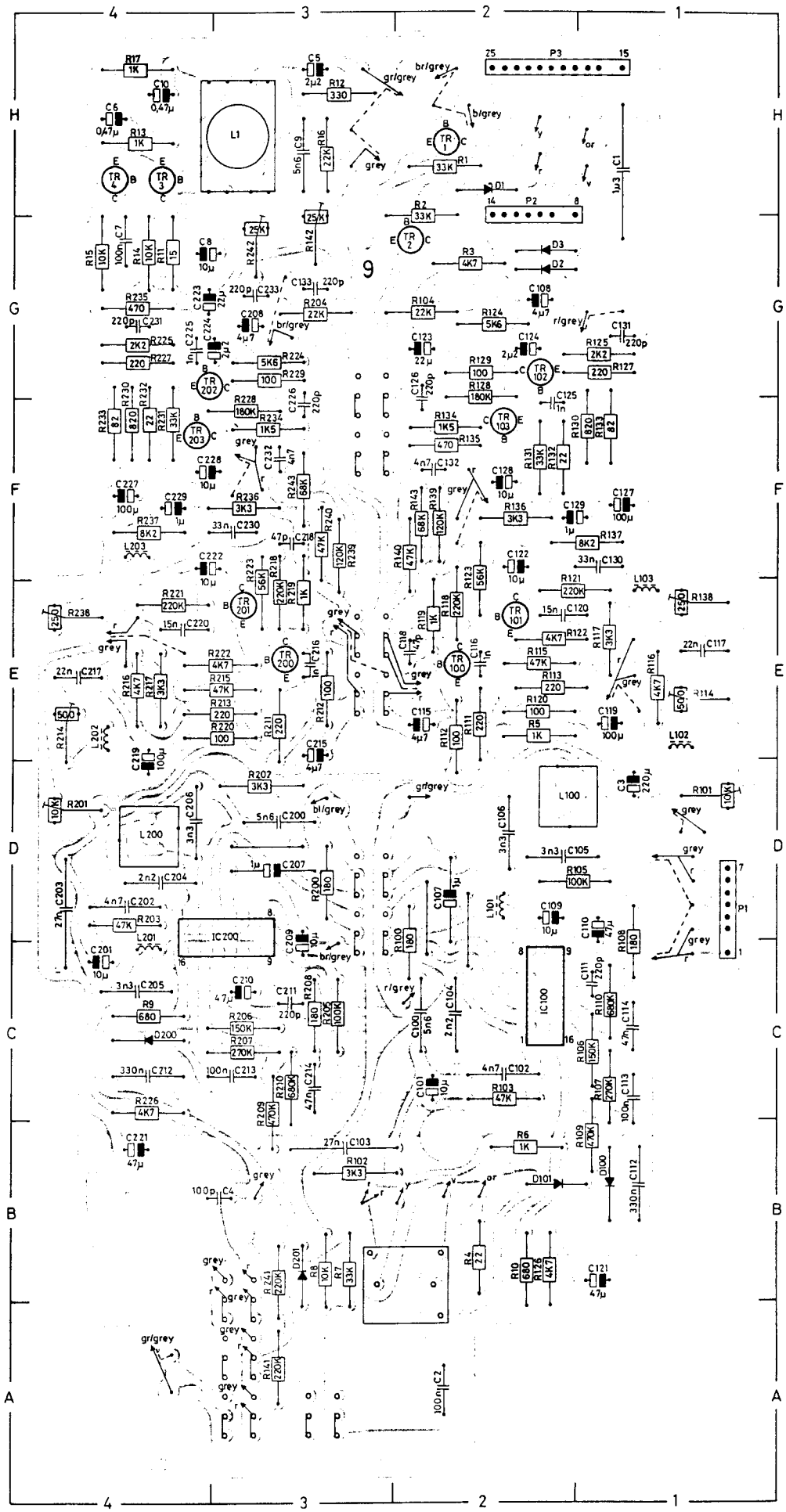

FM, AM AND STEREO DECODER
8002336, PC 2

For Service Manuals Contact
MAURITRON TECHNICAL SERVICES
8 Cherry Tree Rd, Chinnor
Oxon OX9 4QY
Tel:- 01844-351694 Fax:- 01844-352554
Email:- enquiries@mauritron.co.uk

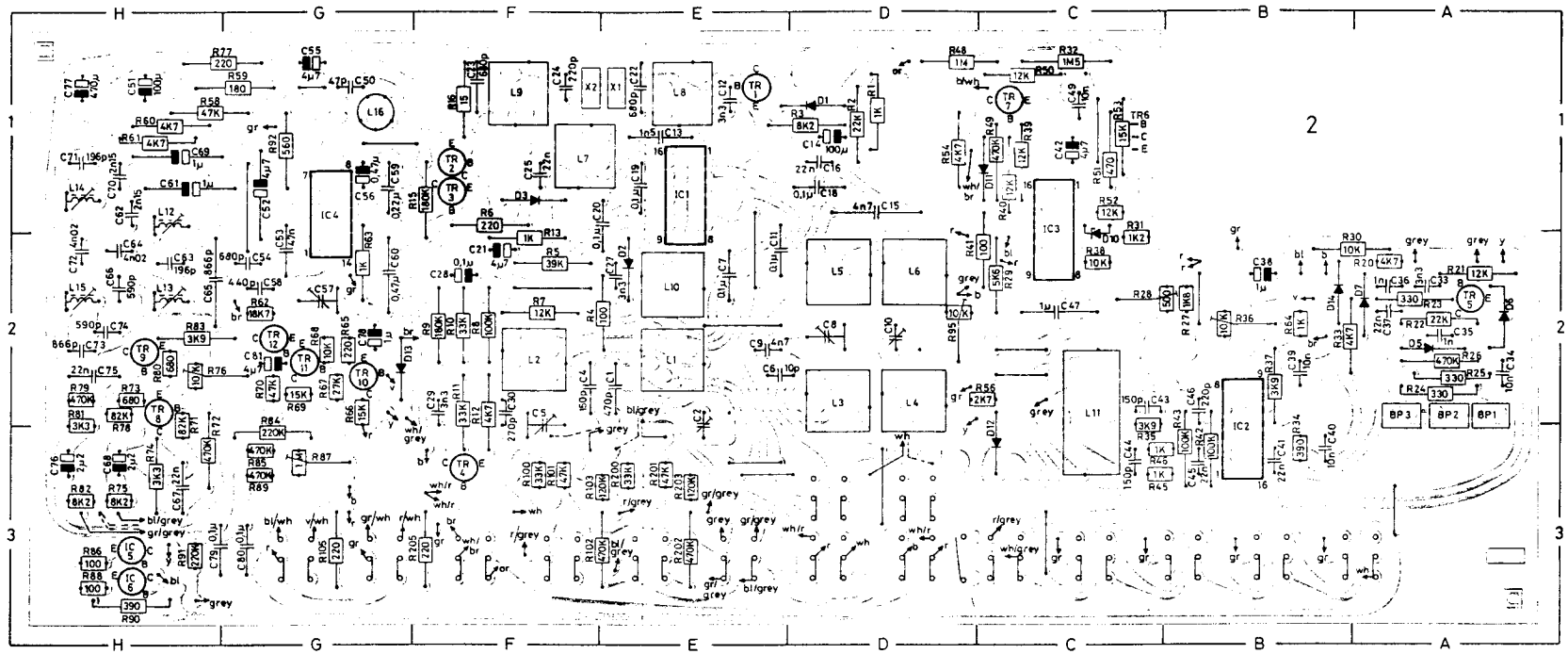

FRONT END, TUNER, 3080071, PC 1

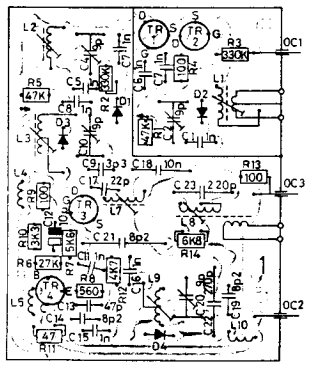

SEEN FROM COPPERFOIL SIDE

OUTPUT AMP. AND POWER SUPPLY
8002301, PC 6

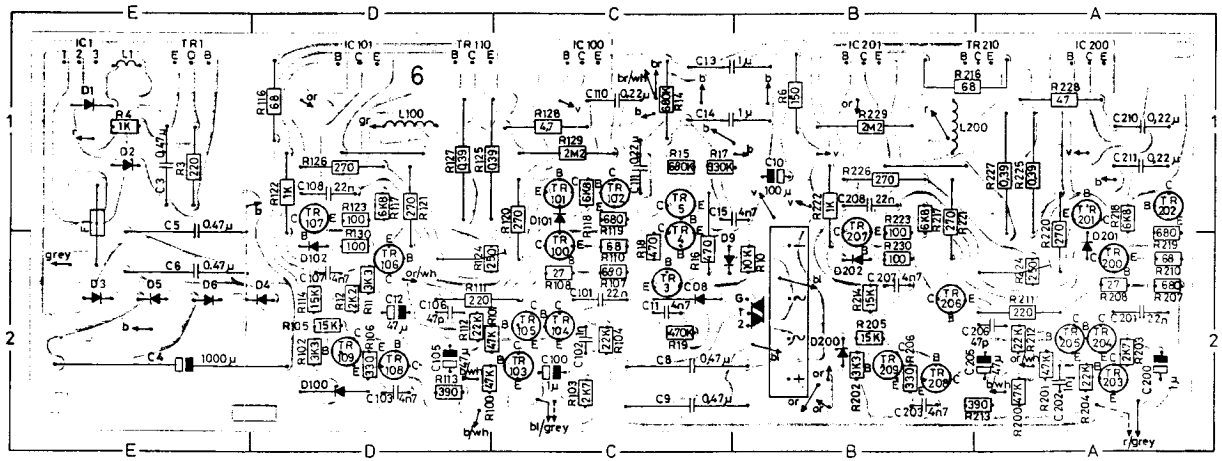

TONE CONTROL AND PRE-AMPLIFIER, 8002318, PC 4

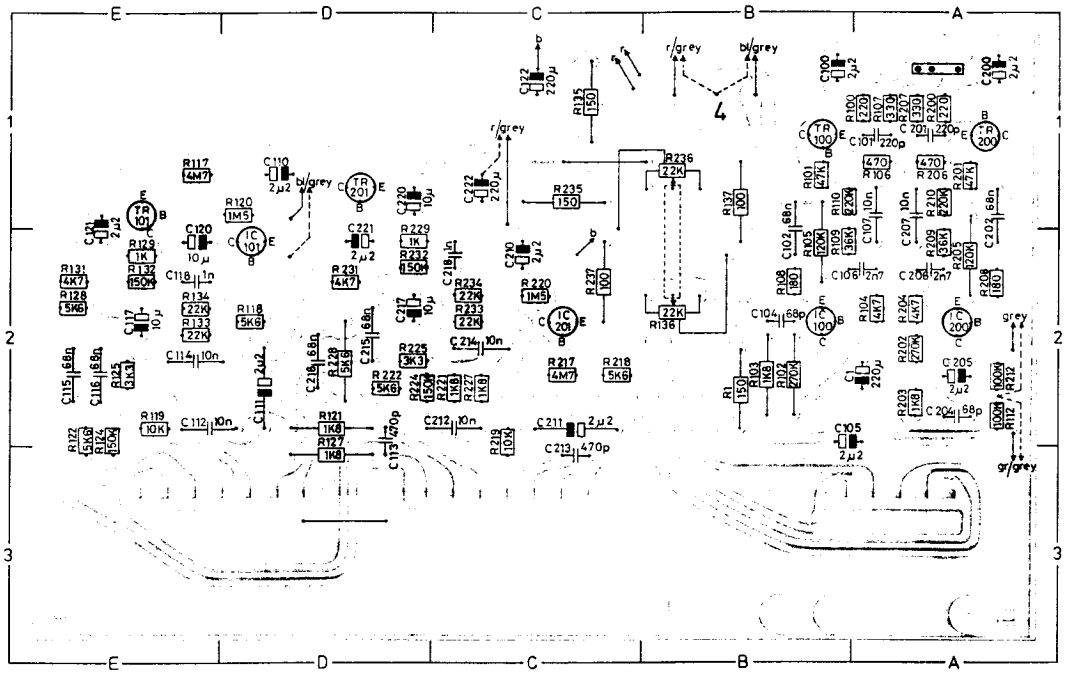

MIC. AMP., 8004163. PC 7

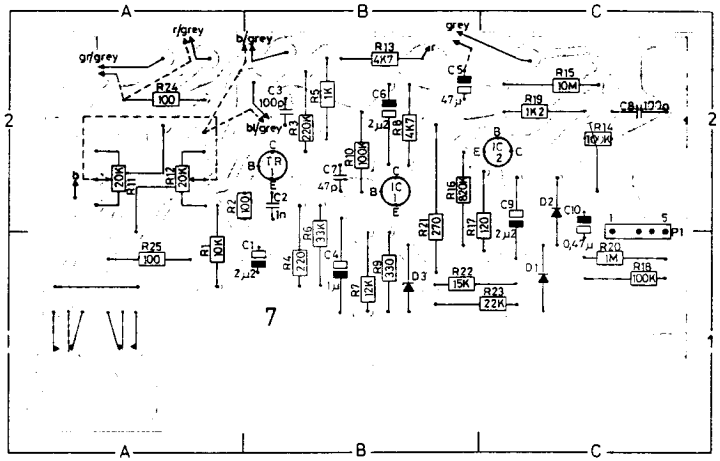

AUTO-STOP, 8004171, PC 5

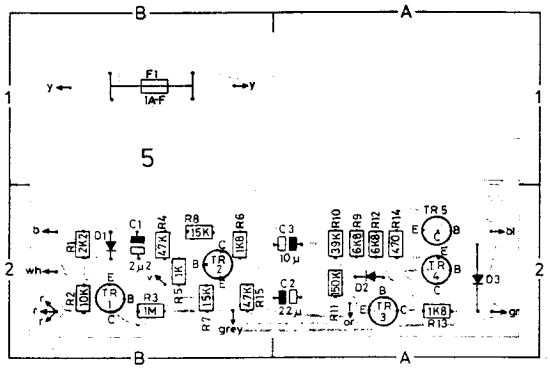

MOTOR CONTROL, 8005023 PC 15

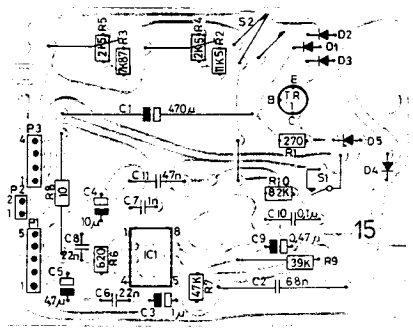

SEEN FROM COPPERFOIL SIDE

INDICATOR, 8004164, PC 8

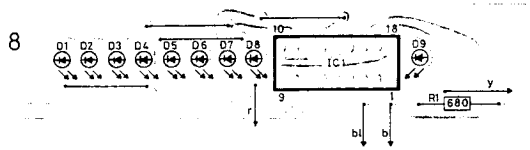

LEDNINGSFARVER
COLOURS OF WIRES
KABELFARBEN

b	black	schwartz	sort
bl	blue	blau	blå
br	brown	braun	brun
gr	green	grün	grøn
grey	grey	grau	grå
or	orange	orange	orange
r	red	rot	rød
v	violet	violett	violet
wh	white	weiss	hvid
y	yellow	gelb	gul

MÅLEBETINGELSER FOR DIAGRAM

Alle DC spændinger er målt i forhold til stel med voltmeter (indre modstand 11 M Ohm).
DC spændinger *uden* parentes er målt med modtageren i stilling FM og antennesignal på 500 µV (1 mV EMK) med pilottone, volume på 0.

DC spændinger i AM delen *uden* parentes er målt med MW knappen aktiveret og signal på 1 V tilført kunstantenne (1 MHz).

DC spændinger *i* parentes er målt uden signal eller med muting aktiveret.

FM signalniveauer er målt ved Δ f 40 kHz, f mod. 1 kHz og antennesignal på 500 µV, (1 mV EMK).

LF følsomheder er målt ved 25 W output. Balance, bas, diskant på 0, volume på max. Udgang belastet med 4 Ohm, input 1 kHz.

Mekaniske omskiftere er vist i neutral stilling.

SYMBOL FOR SIKKERHEDSMODSTANDE

Ved udskiftning af komponenter med dette symbol skal der anvendes samme type, samt samme værdier for ohm og watt. Den nye komponent skal monteres på samme måde som den udskiftede.

CONDITIONS OF MEASUREMENT FOR DIAGRAM

All DC voltages are measured in proportion to chassis with voltmeter (inner resistance 11 M Ohm).

DC voltages *without* brackets are measured with the receiver in position FM and an aerial signal of 500 µV (1 mV EMK) with pilot signal, volume on 0.

DC voltages in the AM section *without* brackets are measured with the MW button activated and a signal of 1 V, supplied to the dummy load. (1 MHz).

DC voltages *with* brackets are measured without signal or with muting activated.

FM signal levels are measured at Δf 40 kHz, f mod. 1 kHz and aerial signal 500 µV. (1 mV EMK).

AF sensitivities are measured at 25 W output. Balance, bass, treble on 0, volume on max. Output loaded with 4 Ohm, input 1 kHz.

Mechanical switches are shown in neutral position.

SYMBOL FOR SAFETY RESISTORS

In case of replacement of components with this symbol use the same type and the same values for Ohms and Watts. The new component is to be mounted in the same way as the replaced.

MESSBEDINGUNGEN FÜR SCHALTBILD

Alle DC Spannungen sind im Verhältnis zu Chassis mit Voltmeter (innerer Widerstand 11 M Ohm) gemessen.

DC Spannungen *ohne* Klammern sind mit dem Empfänger in Stellung FM und dem Antennensignal von 500 µV (1 mV EMK) mit Pilotton gemessen, Volume auf 0.

DC Spannungen im AM Teil *ohne* Klammern sind mit aktivisiertem MW Knopf und einem Signal von 1 V an die Kunstantenne zugeleitet gemessen. (1 MHz).

DC Spannungen *in* Klammern sind ohne Signal oder mit aktivisierter Stummabstimmung gemessen.
UKW Signalniveaus sind bei Δf 40 kHz, f mod. 1 kHz und Antennensignal 500 µV gemessen. (1 mV EMK).

NF Empfindlichkeiten sind an 25 W Ausgang gemessen. Balance, Tiefton, Diskant auf 0, Volume auf max. Ausgang mit 4 Ohm, Eingang 1 kHz belastet.

Mechanische Umschalter sind in neutraler Stellung gezeigt.

SYMBOL FÜR SICHERHEITS-WIDERSTÄNDE

Bei Auswechselung von Sicherheitswiderständen mit diesem Symbol den gleichen Typ und die gleichen Werte für Ohm und Watt benutzen. Der neue Komponent muß wie der ausgewechselte montiert werden.

FM SIGNALNIVEAUER/ FM SIGNAL LEVELS/ UKW SIGNAL NIVEAUS

2 TP 40 8 mV
2 TP 41 600 mV
2 TP 42 40 mV

FØLSOMHEDER/ SENSITIVITIES/ EMPFINDLICHKEITEN

6 TP 100 180 mV
6 TP 200 180 mV
Tape 200 mV
Phono 2,5 mV

DIAGRAM, RECORD PLAYER

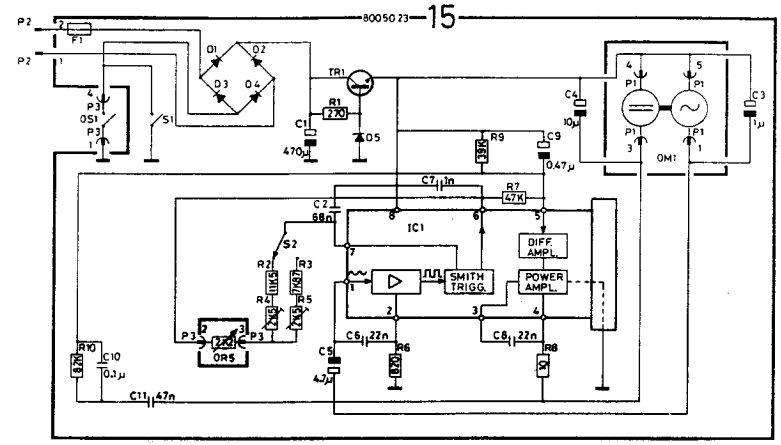

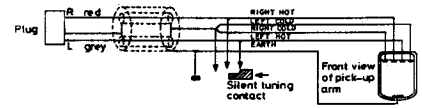

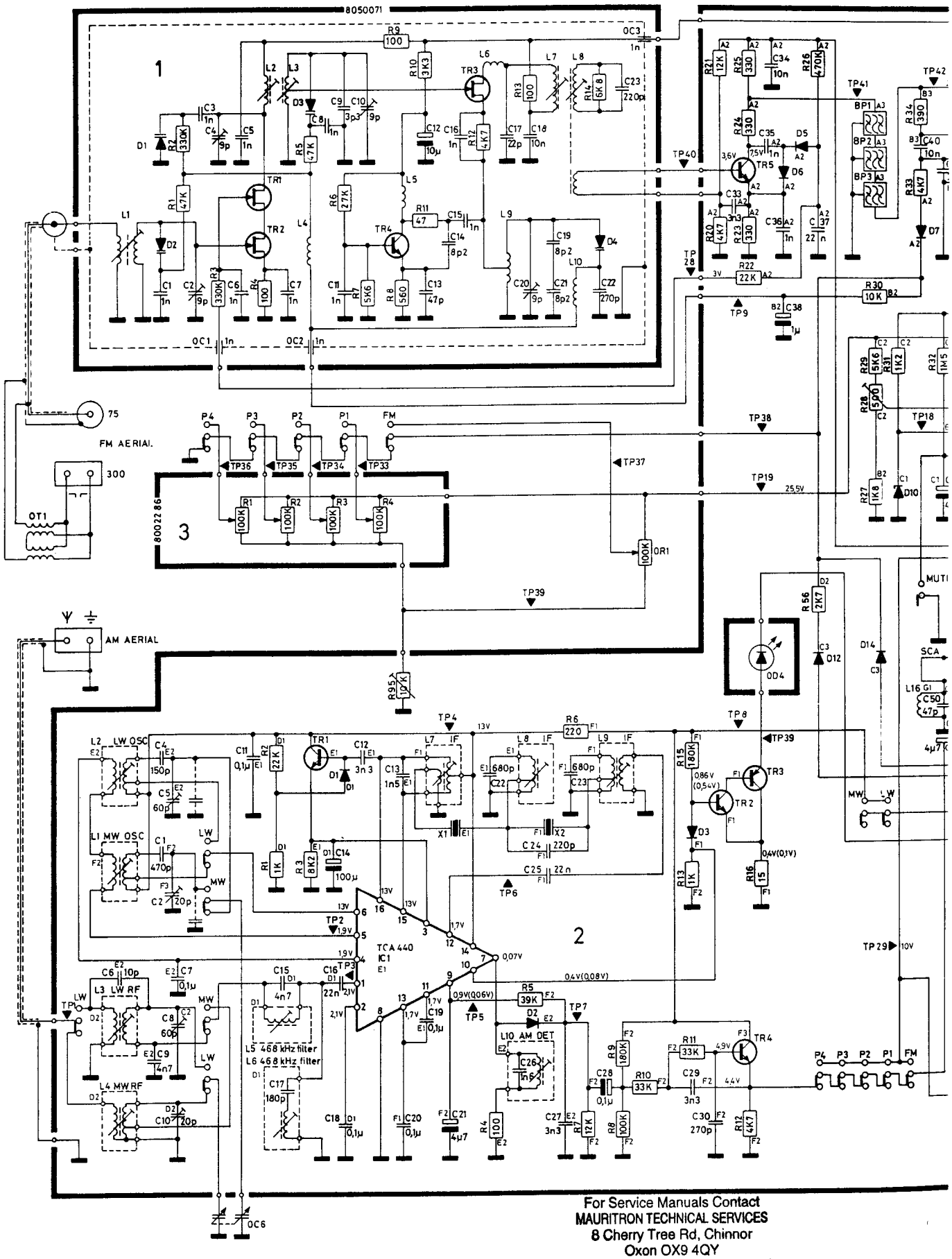

For Service Manuals Contact
MAURITRON TECHNICAL SERVICES
8 Cherry Tree Rd, Chinnor
Oxon OX9 4QY
Tel:- 01844-351694 Fax:- 01844-352554
Email:- enquiries@mauritron.co.uk

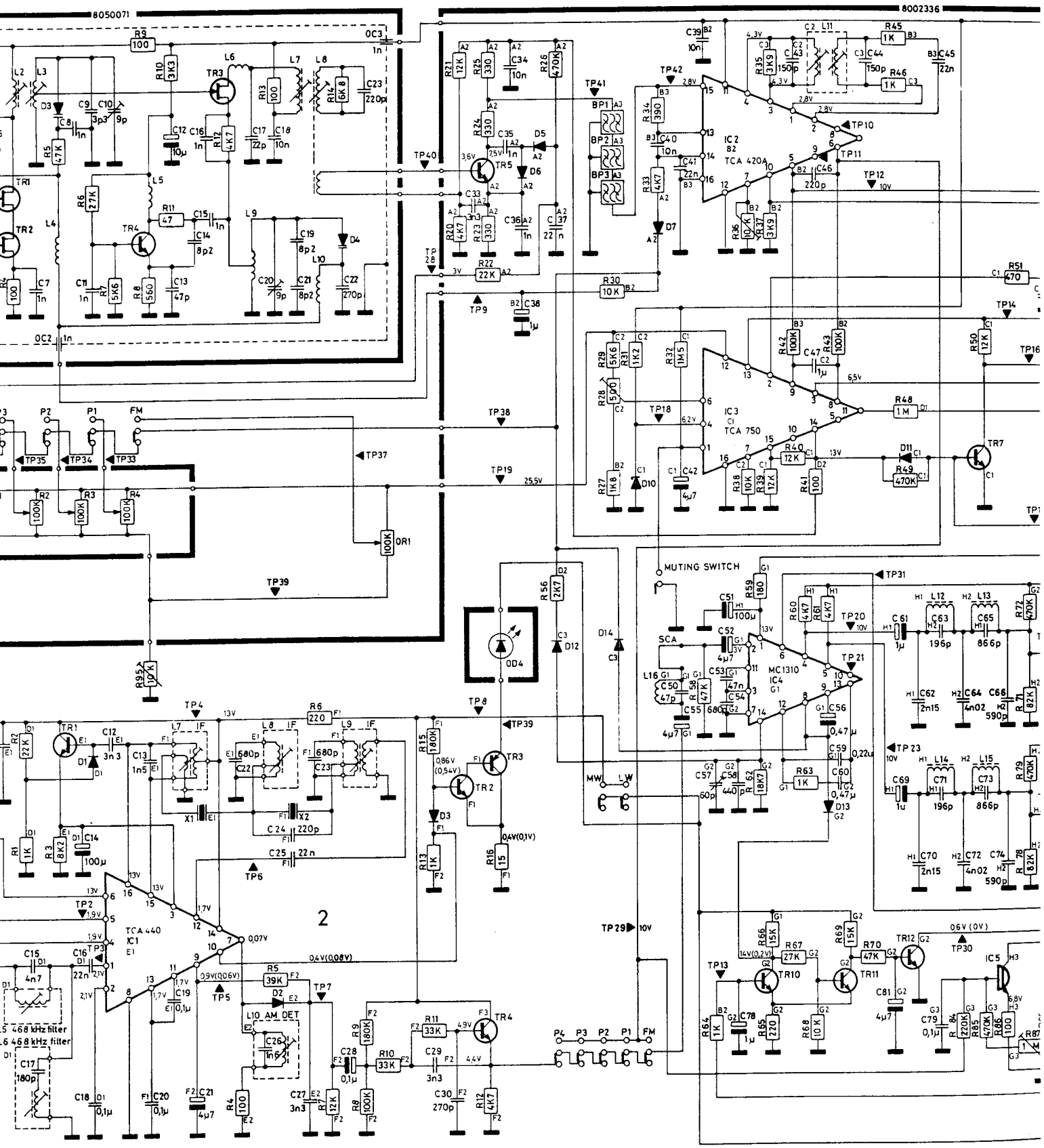
8050071
8002336
IC2
82
TCA 420A
IC3
C1
TCA 750
MUTING SWITCH
MC1310
IC4
G1
TCA 440
IC1
E1
468 kHz filter
468 kHz filter
L10 AM DET
2

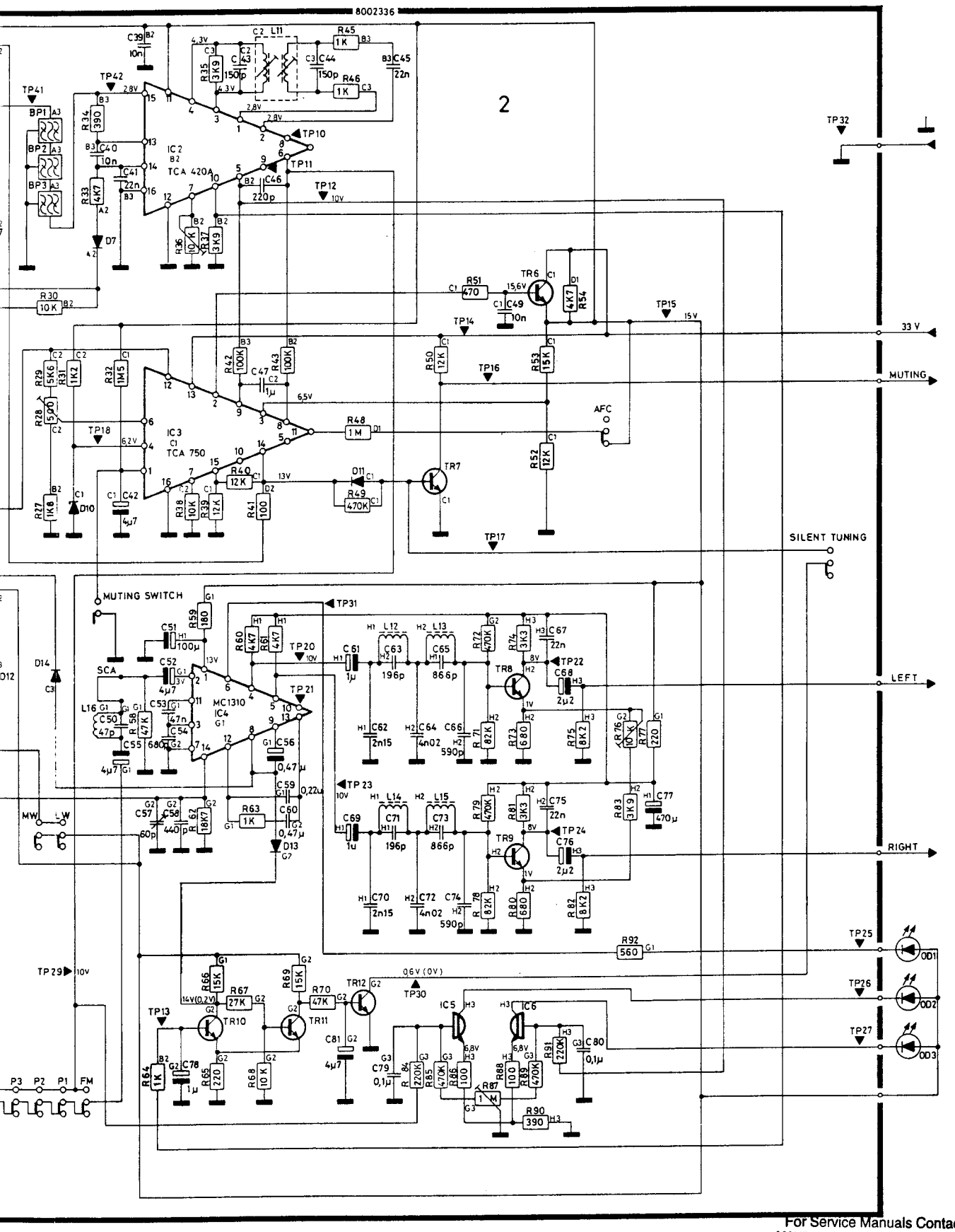

For Service Manuals Contact
MAURITRON TECHNICAL SERVICES
8 Cherry Tree Rd, Chinnor
Oxon OX9 4QY
Tel:- 01844-351694 Fax:- 01844-352554
Email:- enquiries@mauritron.co.uk

Bang & Olufsen

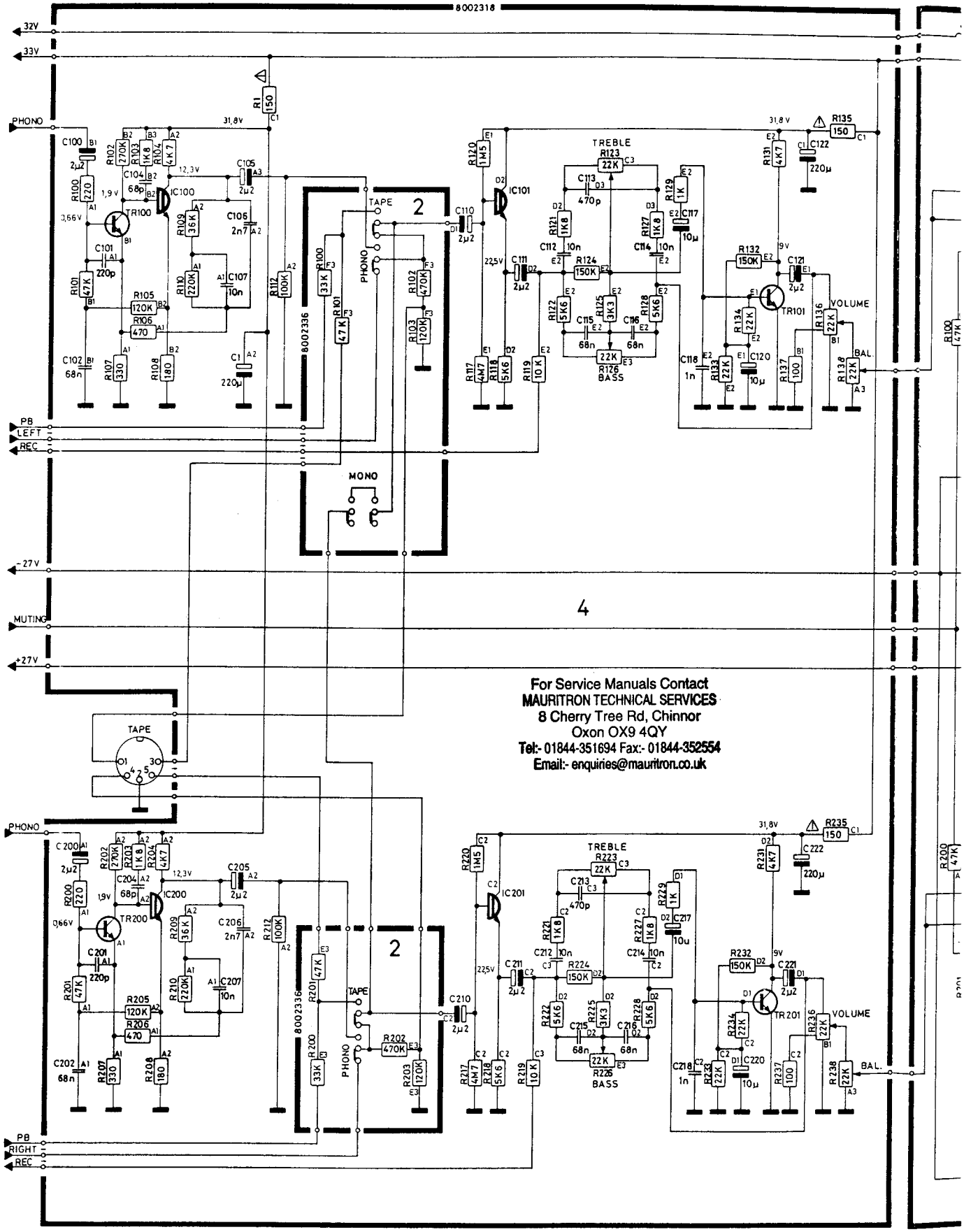

For Service Manuals Contact
MAURITRON TECHNICAL SERVICES
8 Cherry Tree Rd, Chinnor
Oxon OX9 4QY
Tel:- 01844-351694 Fax:- 01844-352554
Email:- enquiries@mauritron.co.uk

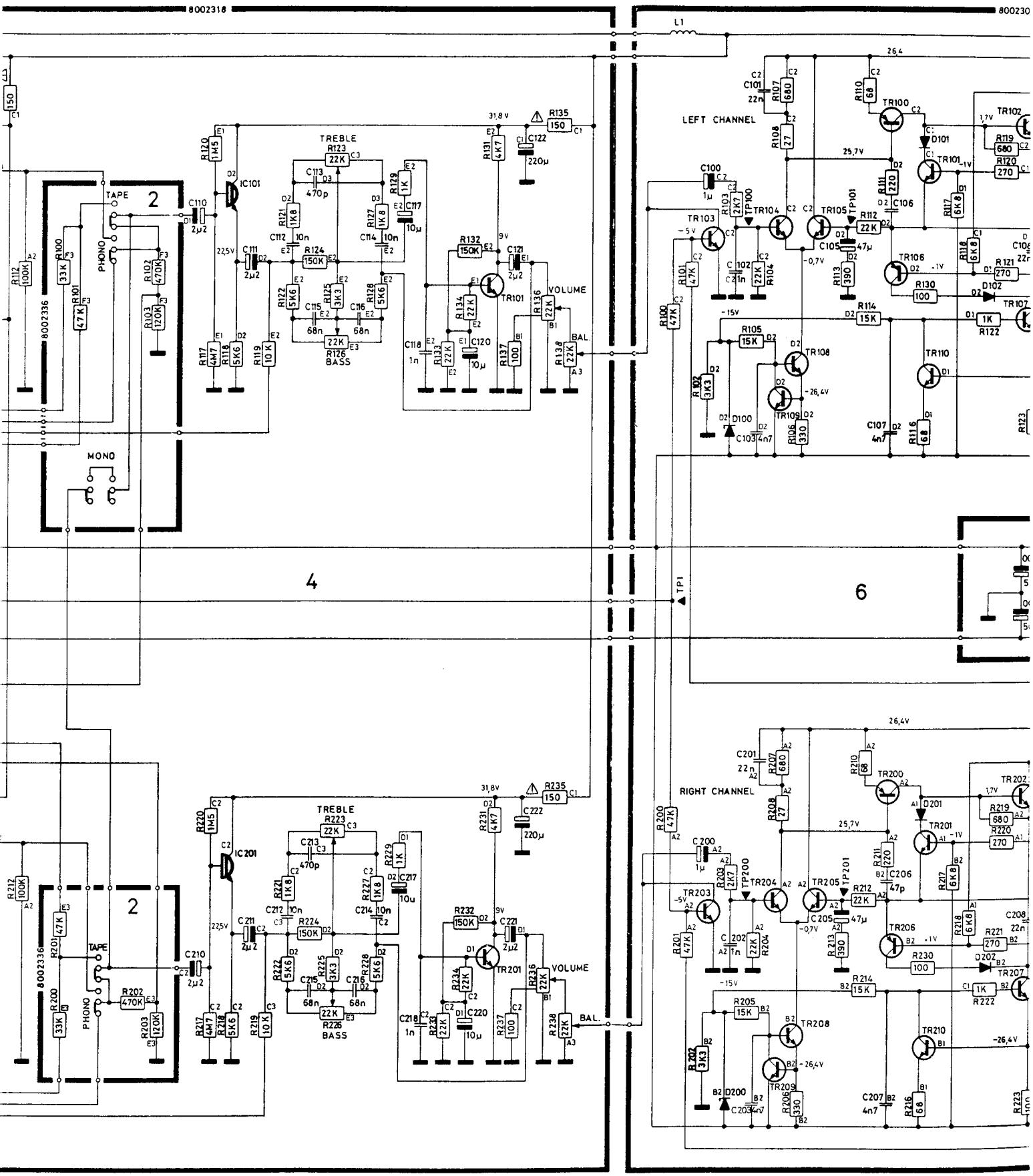
8002318
8002300
LEFT CHANNEL
RIGHT CHANNEL
TREBLE
BASS
VOLUME
BAL.
TAPE
PHONO
MONO
IC101
IC201
TR100
TR101
TR102
TR103
TR104
TR105
TR106
TR107
TR108
TR109
TR110
TR200
TR201
TR202
TR203
TR204
TR205
TR206
TR207
TR208
TR209
TR210
TP100
TP101
TP200
TP201
TP1
L1
8002336
2
4
6

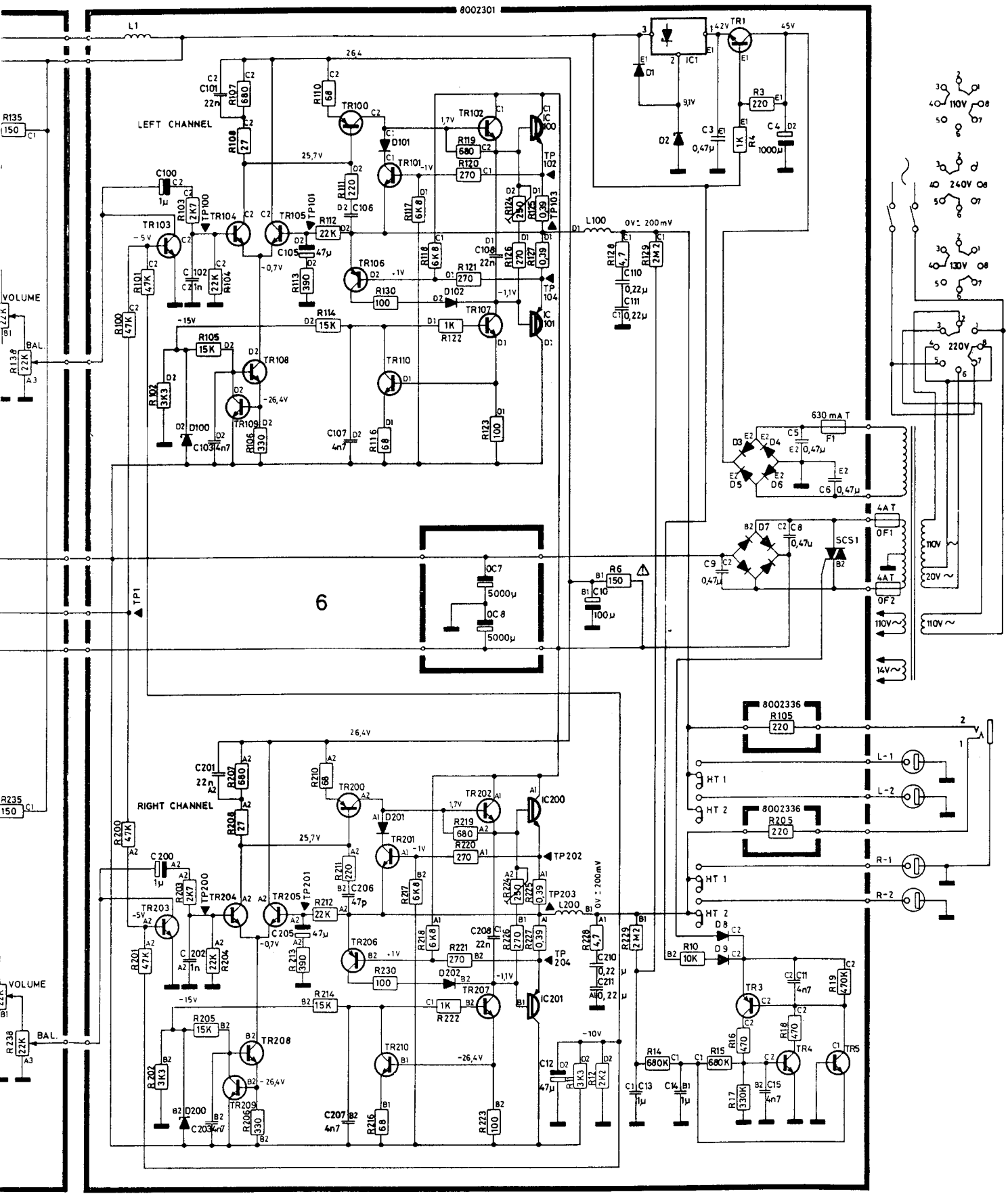
8002301
LEFT CHANNEL
RIGHT CHANNEL
VOLUME
BAL.
6
8002336
110V
240V
130V
220V
630 mA T
4AT
20V ~
14V~
L-1
L-2
R-1
R-2
HT 1
HT 2

DIAGRAM 4

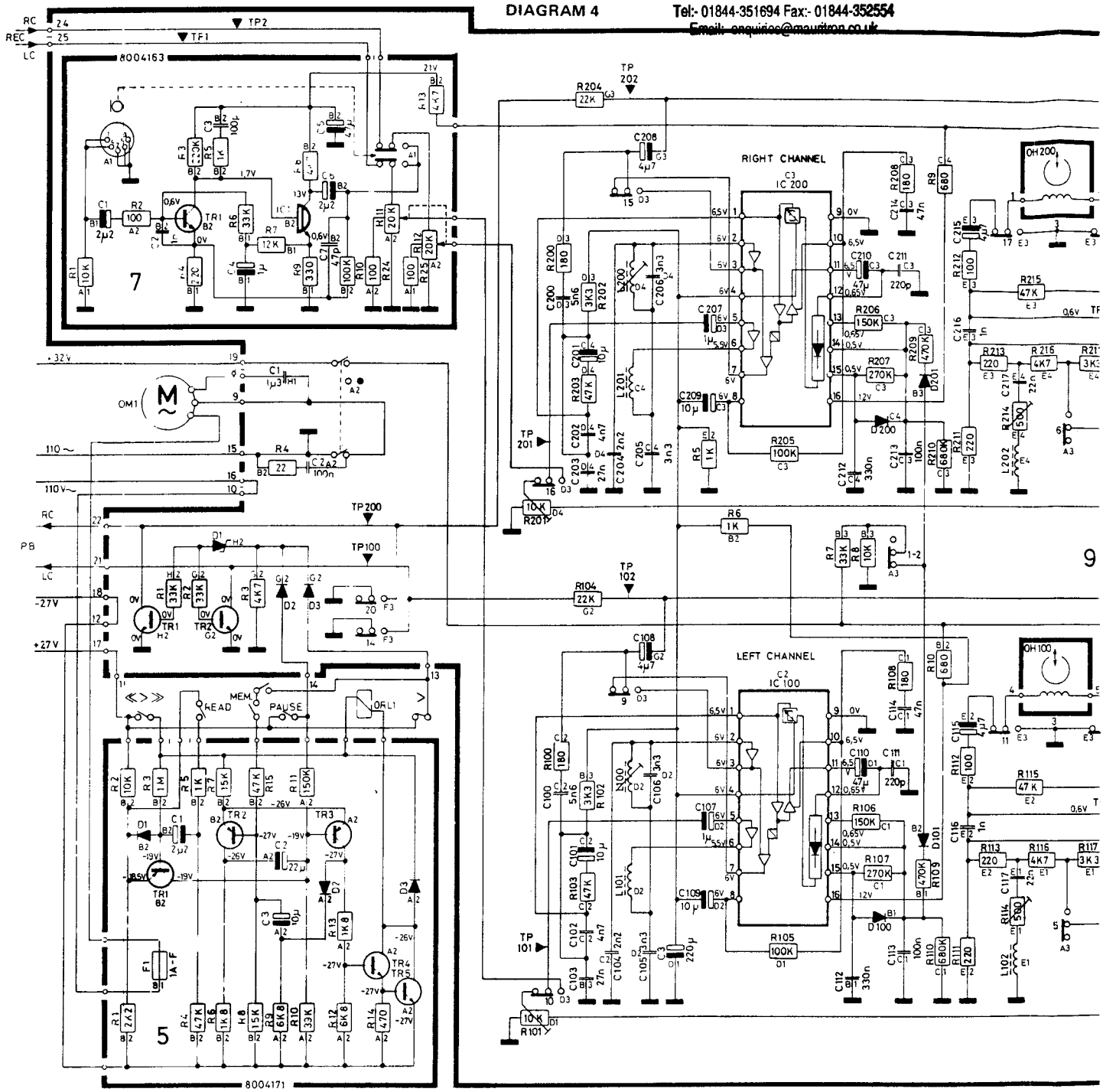

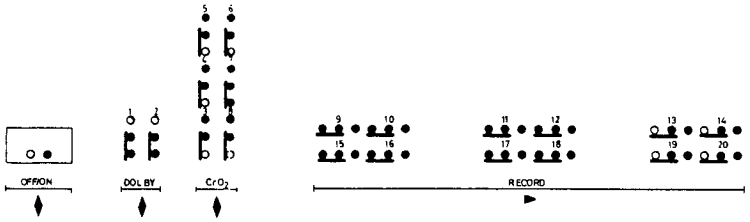

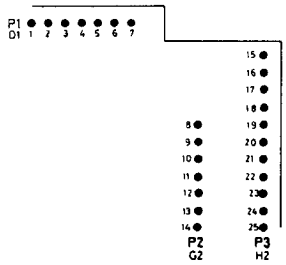

MÅLEPUNKTER DC Spændingerne på 9IC100 og 9IC200 er målt med Dolby-knapper indtrykket. Spændingerne på 9TR102 - 9TR103, 9TR3 - 9TR4 og 9TR202 - 9TR203 er målt i stilling Record.

AC Gengive fra pegelbånd:

TP100 - TP200	700 mV
TP101 - TP201	40 mV
TP102 - TP202	700 mV

CrO_2-knappen indtrykket og optageknappen i max. Optage:

TP3	65 V 98 kHz
TP1 - TP2	40 mV
TP101 - TP201	40 mV
TP102 - TP202	580 mV
TP103 - TP203	3 V

1 rød LED må lyse ved mono signal.

Mikrofon Optage:

Mikrofon indgang	90 μV

TEST I

AC

CrO_2-b
and rec
in max

Microp

DIAGRAM 4

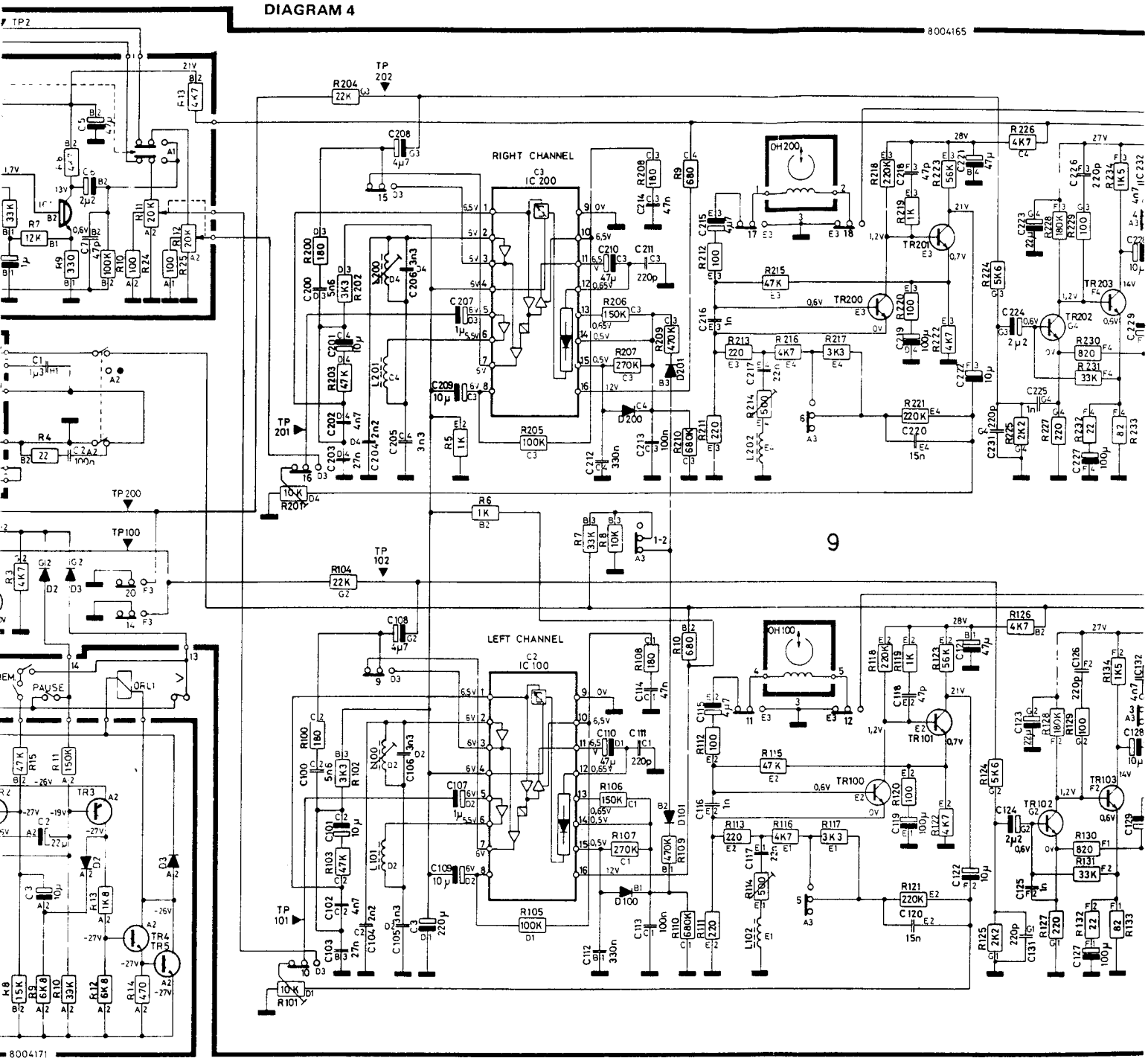

MÅLEPUNKTER DC

Spændingerne på 9IC100 og 9IC200 er målt med Dolby-knapper indtrykket.
Spændingerne på 9TR102 - 9TR103, 9TR3 - 9TR4 og 9TR202 - 9TR203 er målt i stilling Record.

AC

Gengive fra pegelbånd:
TP100 - TP200 . . . . . .700 mV
TP101 - TP201 . . . . . .40 mV
TP102 - TP202 . . . . . .700 mV

CrO_2-knappen indtrykket og optageknappen i max.

Optage:
TP3 . . . . . 65 V 98 kHz
TP1 - TP2 . . . . . .40 mV
TP101 - TP201 . . . . . .40 mV
TP102 - TP202 . . . . . .580 mV
TP103 - TP203 . . . . . 3 V
1 rød LED må lyse ved mono signal.

Mikrofon

Optage:
Mikrofon indgang . . . . . .90 μV

TEST POINTS DC

The voltages on 9IC100 ar
been measured with dep
button.
The voltages on 9TR102 - 9
9TR4 and 9TR202 - 9TR2
measured in position Recor

AC

Playing back from level tap
TP100 - TP200 . . . . . .
TP101 - TP201 . . . . . .
TP102 - TP202 . . . . . .

CrO_2-button depressed and recording button in max.

Recording:
TP3 . . . . . .
TP1 - TP2 . . . . . .
TP101 - TP201 . . . . . .
TP102 - TP202 . . . . . .
TP103 - TP203 . . . . . .
1 red LED must shine at m

Microphone

Recording:
Microphone input. . . . . .

For Service Manuals Contact
MAURITRON TECHNICAL SERVICES
8 Cherry Tree Rd, Chinnor
Oxon OX9 4QY
Tel: 01844 351694 Fax: 01844 352554
Email:- enquiries@mauritron.co.uk

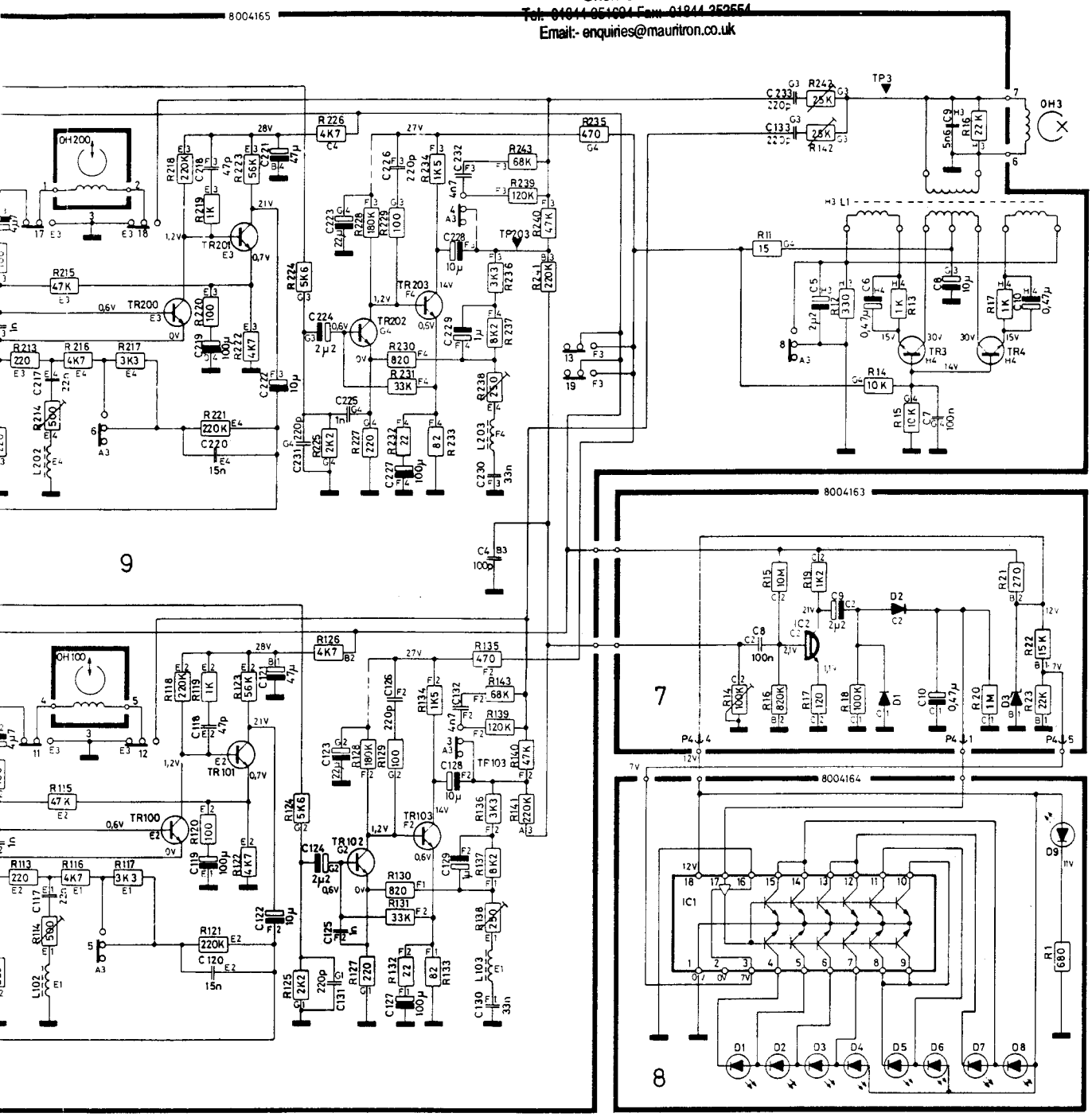

er mält
9TR3
i stil-

700 mV
.40 mV
700 mV

98 kHz
.40 mV
.40 mV
580 mV
. . 3 V

.90 µV

TEST POINTS DC

The voltages on 9IC100 and 9IC200 have been measured with depressed Dolby-button.
The voltages on 9TR102 - 9TR103, 9TR3 - 9TR4 and 9TR202 - 9TR203 have been measured in position Record.

AC

Playing back from level tape:
TP100 - TP200 . . . . . .700 mV
TP101 - TP201 . . . . . .40 mV
TP102 - TP202 . . . . . .700 mV

CrO_2-button depressed and recording button in max.

Recording:
TP3 . . . . . 65 V 98 kHz
TP1 - TP2 . . . . . .40 mV
TP101 - TP201 . . . . . .40 mV
TP102 - TP202 . . . . . .580 mV
TP103 - TP203 . . . . . 3 V
1 red LED must shine at mono signal.

Microphone

Recording:
Microphone input. . . . . 90 µV

TESTPUNKTE DC

Die Spannungen auf 9IC100 and 9IC200 sind mit dem Dolby-Knopf eingedrückt gemessen.
Die Spannungen auf 9TR102 - 9TR103, 9TR3 - 9TR4 und 9TR202 - 9TR203 sind in Position Record gemessen.

AC

Von Pegelband wiedergeben:
TP100 - TP200 . . . . . .700 mV
TP101 - TP201 . . . . . .40 mV
TP102 - TP202 . . . . . .700 mV

CrO_2 Knopf eingedrückt und Aufnahme Knopf in max.

Aufnehmen:
TP3 . . . . . 65 V 98 kHz
TP1 - TP2 . . . . . .40 mV
TP101 - TP201 . . . . . .40 mV
TP102 - TP202 . . . . . .580 mV
TP103 - TP203 . . . . . 3 V
Bei Mono-Signal muß ein rotes LED leuchten.

Mikrophon

Aufnehmen:
Mikrophoneingang . . . . . .90 µV

BEOMASTER 1500, TYPE 2629

ADSKILLELSE/SAMLING
DISASSEMBLY/ASSEMBLY
ZERLEGUNG/SAMMLUNG
DEMONTAGE/MONTAGE

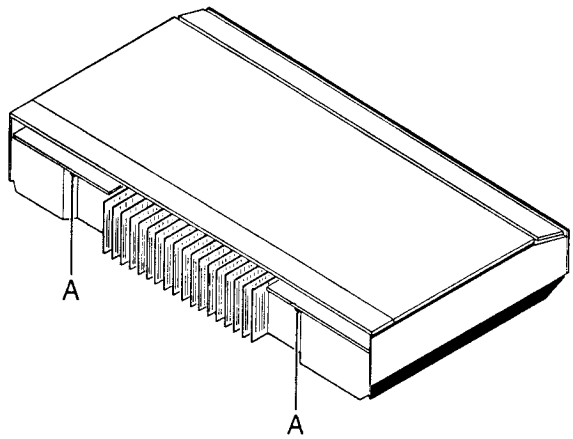

Kabinet, topplade
De to skruer (A) i bagkanten skrues ud. Toppladen kan nu tages af ved at løfte i bagkanten.

Cabinet, top plate
Unscrew the two screws (A) in the rear edge. Now the top plate may be removed by lifting the rear edge.

Gehäuse, obere Abdeckung
Die zwei Schrauben (A) In der Hinterkante abschrauben.
Die Abdeckplatte kann jetzt dadurch entfernt werden, dass man in der Hinterkante hebt.

Ebénisterie, plaque haute
Dévisser les deux vis (A) dans l'âreté arrière.
Maintenant il est possible d'enlever la plaque haute en levant l'âreté arrière.

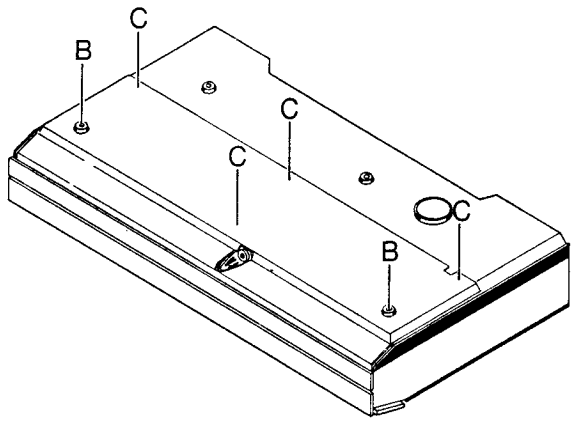

Bundplade
De to gummifødder (B) og de fire skruer (C) fjernes.

Bottom plate
Remove the two rubber supports (B) and the four screws (C).

Bodenabdeckung
Die zwei Gummifüsse (B) und die vier Schrauben (C) entfernen.

Plaque de fond
Enlever les deux pieds cauotchouc (B) et les quatre vis (C).

Bang & Olufsen

TECHNICAL DATA, DIN 45500

Amplifier	Power output	2 x 25 W RMS/4 ohms
		2 x 19 W RMS/8 ohms
		2 X 40 W music/4 ohms
		2 x 25 W music/8 ohms
	Speaker impedance	4 ohms
	Harmonic distortion	<0.1%
	Intermodulation	< 0.25%
	Frequency range	20 - 35,000 Hz
	Damping factor	> 50
	PHONO, inputs	2.2 mV/47 kohms
	Overload margin	80 mV
	Signal-to-noise ratio	> 60 dB
	TAPE, inputs	200 mV/470 kohms
	Signal-to-noise ratio	> 60 dB
	Channel separation 1000 Hz	> 56 dB
	Channel separation 250 - 10,000 Hz	> 40 dB
	TAPE, outputs (nom. input phono)	30 mV/100 kohms
	Headphones	14 V/220 ohms
	BASS control at 40 Hz	± 12 dB
	TREBLE control at 12,5000Hz	± 12 dB
	BALANCE control	± 60 dB
FM tuner	Aerial impedance	75/300 ohms
	Range	87.5 - 108 MHz
	Sensitivity, stereo, 46 dB	35µV/75 ohms
	Frequency range	20 - 15,000 Hz
	Harmonic distortion	<0,4%
	Channel separation, 1000 Hz	> 35 dB
	Channel separation, 250 - 10,000 Hz	> 30 dB
	Pilot suppression, 19 kHz	> 45 dB
	38 kHz	> 50 dB
AM tuner	LW	147 - 350 kHz
	MW	520 - 1610 kHz
	Sensitivity LW 200 kHz, 20 dB S/N IEC	90µV
	MW 1000 kHz, 20 dB S/N IEC	90µV
	Bandwidth 3 dB	6 kHz
Other data	Power supply	110 - 130 -220 - 240 V
	Frequency	50/60 Hz
	Power consumption	20 - 150 W
	Dimensions W x H x D	50 x 9 x 27 cm
	Weight	9 kg

Subject to change without notice

STYKLISTE
BEOMASTER 1500, TYPE 2629

14	2568509	Frontprofil
* 15	3152243	Skærm, TREBLE
* 16	3152241	Skærm, BASS
* 29	3152242	Skærm, BALANCE
* 32	3152092	Slæde
* 36	2039901	Skrue
48	3291097	Skala
59	3412801	Kabinet side, venstre, teak
	3412803	Kabinet side, venstre, palisander
	3412804	Kabinetside, venstre, eg
79	3470083	Vinkel
* 102	2013017	Skrue
113	3452315	Chassis
125	3470084	Vinkel
137	3412811	Kabinetside, højre, teak
	3412813	Kabinetside, højre, palisander
	3412814	Kabinetside, højre, eg
* 144	8013193	Nettransformator

IKKE VISTE DELE

3532127	Diagram Beomaster 1500
3454237	Bundplade
3412571	Kabinetsæt, 3 dele, teak
3412573	Kabinetsæt, 3 dele, palisander
3412574	Kabinetsæt, 3 dele, eg
3391503	Yderæske
3397294	Skumemballage, venstre
3397295	Skumemballage, højre

* Se også afsnit med ændringer.

RETTELSER/ÆNDRINGER
TIL BEOCENTER 2800 OG 4600

Ændringer, side 8-2

15	3152243	Skærm, TREBLE
16	3152241	Skærm, BASS
29	3152242	Skærm, BALANCE
32	3152092	Slæde
36	2039901	Skrue
102	2013017	Skrue
144	8013193	Nettransformator efter apparat nr. 1536001

Rettelser

7TR1: 8320344
Fatning 3 pol. PC4: 7220131
Side 8-9: pos. 13 2034215 Skrue
Side 8-12: pos. 74 3017012 Kurvehjul

6TR100/200 8320365
6D10 8300208
6D11

Tilføjelser

60 HZ sæt Beocenter 4600: 8410008

PARTS LIST
BEOMASTER 1500, TYPE2629

14	258509	Front panel
*15	3152243	Screen, TREBLE
*16	3152241	Screen, BASS
*29	3152242	Screen, BALANCE
*32	3152092	Slide
*36	2039901	Screw
48	3191097	Dial
59	3412801	Cabinet side, left, teak
	3412803	Cabinet side, left, rosewood
	3412804	Cabinet side, left, oak
79	3470083	Bracket
*102	2013017	Screw
113	3452315	Chassis
125	3470084	Bracket
137	3412811	Cabinet side, right, teak
	3412813	Cabinet side, right, rosewood
	3412814	Cabinet side, right, oak
* 144	8013193	Mains transformer

Parts not shown

3532127	Diagram, Beomaster 1500
3454237	Bottom plate
3412571	Cabinet set, 3 parts, teak
3412573	Cabinet set, 3 parts, rosewood
3412574	Cabinet set, 3 parts, oak
3391503	Outer carton
3397294	Foam packing, left
3397295	Foam packing, right

* See also paragraph on changes.

CORRECTIONS/CHANGES TO BEOCENTER 2800 AND 4600

Changes, page 8-2

15	3152243	Screen, TREBLE
16	3152241	Screen, BASS
29	3152242	Screen, BALANCE
32	3152092	Slide
36	2039901	Screw
102	2013017	Screw
144	8013193	Mains transformer after serial no. 1536001

Corrections

7TR1: 8320344
Socket 3 pol. PC4: 7220131
Page 8-9: pos. 13 2034215 Screw
Page 8-12: pos. 74 3017012 Cam-lifting wheel

Additions

6TR100/200 8320365
6D10 8300208
6D11

60 Hz kit Beocenter 4600: 8410008

STÜCKLISTE
BEOMASTER 1500, TYP 2629

14	2568509	Frontprofil
*15	3152243	Schirm, TREBLE
*16	3152241	Schirm, BASS
*29	3152242	Schirm, BALANCE
*32	3152092	Schlitten
*36	2039901	Schraube
48	3191097	Skala
59	3412801	Gehäusenseite, link, Teak
	3412803	Gehäusenseite, link, Palisander
	3412804	Gehäusenseite, link, Eiche
79	3470083	Winkel
*102	2013017	Schraube
113	3452315	Chassis
125	3470084	Winkel
137	3412811	Gehäusenseite, recht, Teak
	3412813	Gehäusenseite, recht, Palisander
	3412814	Gehäusenseite, recht, Eiche
*144	8013193	Netztransformator

Nicht gezeigte Teile

3532127	Schaltbild, Beomaster 1500
3454237	Bodenabdeckung
3412571	Gehäusensatz, 3 Teile, Teak
342573	Gehäusensatz, 3 Teile, Palisander
3412573	Gehäusensatz, 3 Teile, Palisander
3412574	Gehäusensatz, 3 Teile, Eiche
3391503	Aussenkarton
3397294	Schaumverpackung, link
3397295	Schaumverpackung, recht

* Siehe auch Abschnitt uber Änderungen.

KORREKTIONEN/ÄNDERUNGEN ZU BEOMASTER 2800 UND 4600

Änderungen, seite 8-2

15	3152243	Schirm, TREBLE
16	3152241	Schirm, BASS
29	3152242	Schirm, BALANCE
32	3152092	Schlitten
36	2039901	Schraube
102	2013017	Schraube
144	8013193	Netztransformator, von Geräte Nr. 1536001 ab.

Korrektionen

7TR1: 8320344
Fassung 3 pol. PC4: 7220131
Seite 8-9: Pos. 13 2034215 Schraube
Seite 8-12: Pos. 74 3017012 Kurvenrad

Hinzufügungen

6TR100/200 8320365
6D10 8300208
6D11
60 Hz Kit Beocenter 4600: 8410008

LISTE DES PIECES DETACHEES BEOMASTER 1500, TYPE 2629

14	2568509	plaque avant
*15	3152243	écran, TREBLE
*16	3152241	écran, BASS
*29	3152242	écran, BALANCE
*32	3152092	guide
*36	2039901	vis
48	3191097	cadran
59	3412801	ébénisterie, gauche, teck
	3412803	ébénisterie, gauche, palissandre
	3412804	ébénisterie, gauche, chene
79	3470083	équerre
*102	2013017	vis
113	3452315	chassis
125	3470084	équerre
137	3412811	ébénisterie, droit, teck
	3412813	ébénisterie, droit, palissandre
	3412814	ébénisterie, droit, chene
*144	8013193	transformateur secteur

Pièces non indiquées

3532127	schéma, Beomaster 1500
3454237	plaque de fond
3412571	ébénisterie, 3 parts, teck
3412573	ébénisterie, 3 parts, palissandre
3412574	ébénisterie, 3 parts, chêne
3391503	boite extérieure
3397294	emballage polystyrene, gauche
3397295	emballage polystyrene, droit

* Voir aussi la section concernant modifications

CORRECTIONS/MODIFICATIONS POUR BEOCENTER 2800 ET 4600

Modifications, page 8-2

15	3152243	écran, TREBLE
16	3152241	écran, BASS
29	3152242	écran, BALANCE
32	3152092	guide
36	2039901	vis
102	2013017	vis
144	8012193	transformateur secteur, de l'appareil no. 1536001

Corrections

7TR1: 8320344
Douille 3 pol. PC4: 7220131
Page 8-9: Pos. 13 2034215 vis
Page 8-12: Pos. 74 3017012 roue courbé

Suppléments

6TR100/200 8320365
6D10 8300208
6D11

60 Hz Kit Beocenter 4600: 8410008

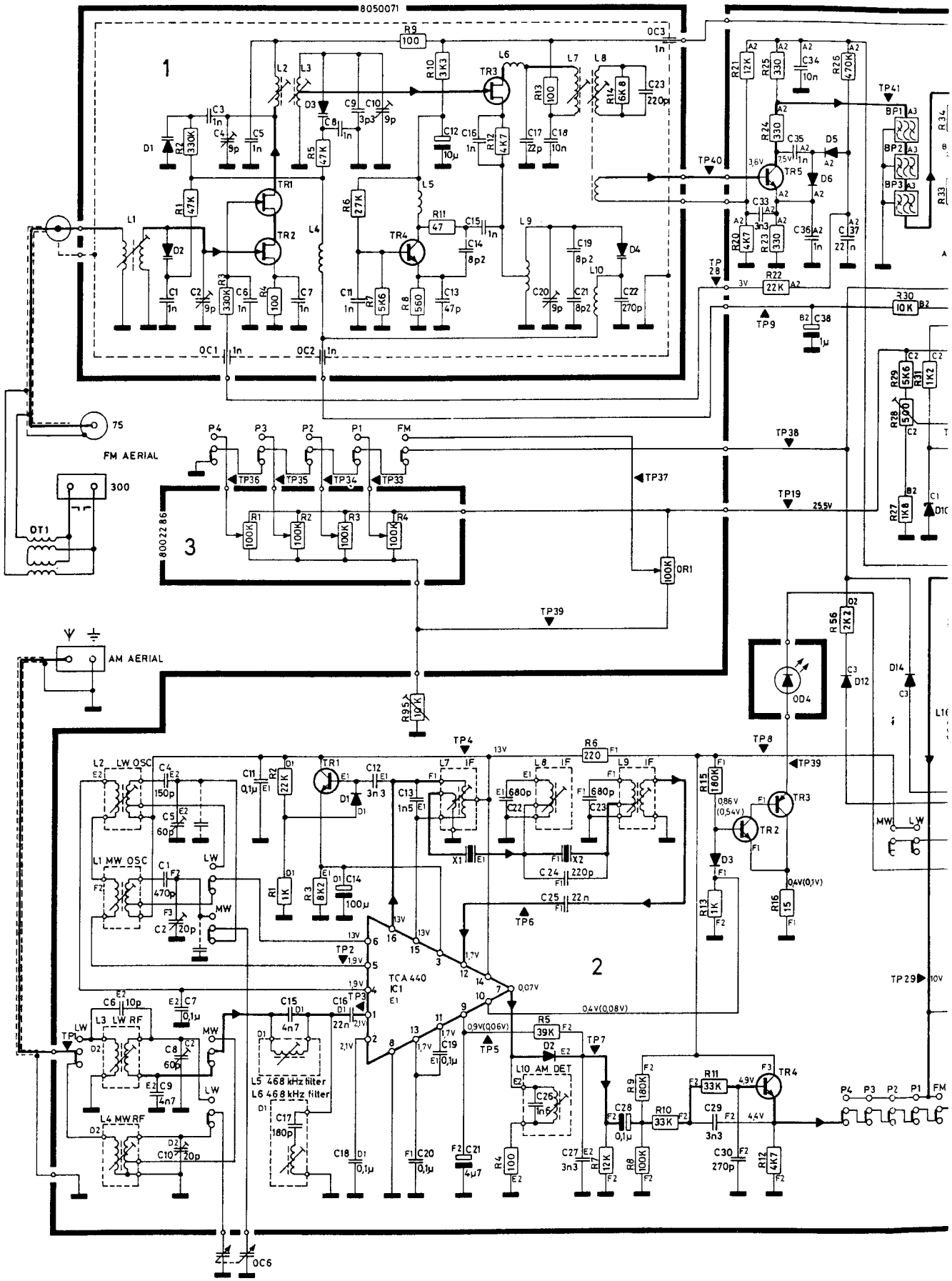

Signalvej vist for henholdsvis AM (stilling LW), FM og for LF venstre kanal./ Signalweg für bzw. AM (Stellung LW), FM und NF linken

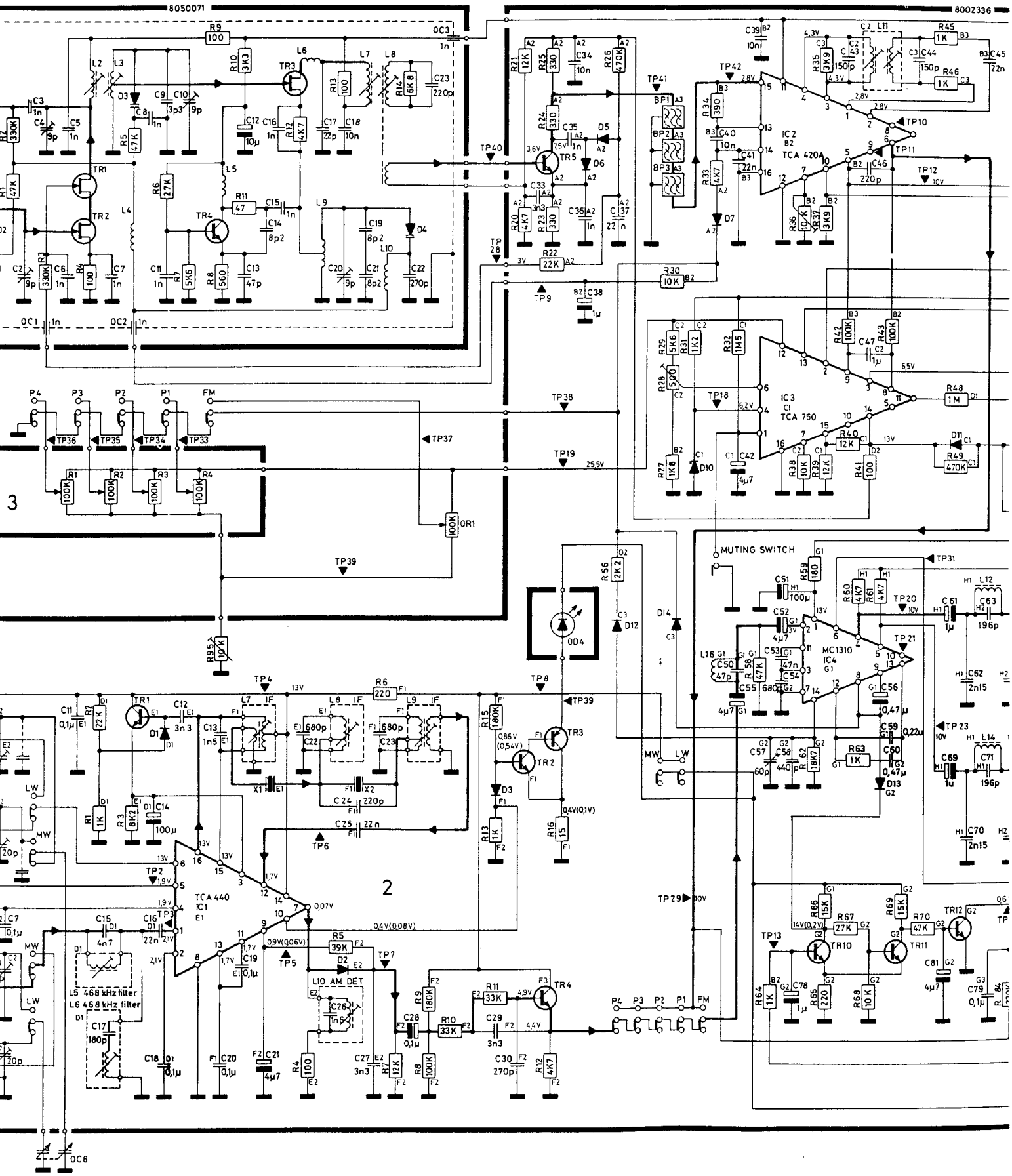

M (stilling LW), FM og for LF venstre kanal./ Signalweg für bzw. AM (Stellung LW), FM und NF linken Kanal gezeigt./ Signal path is shown for AM

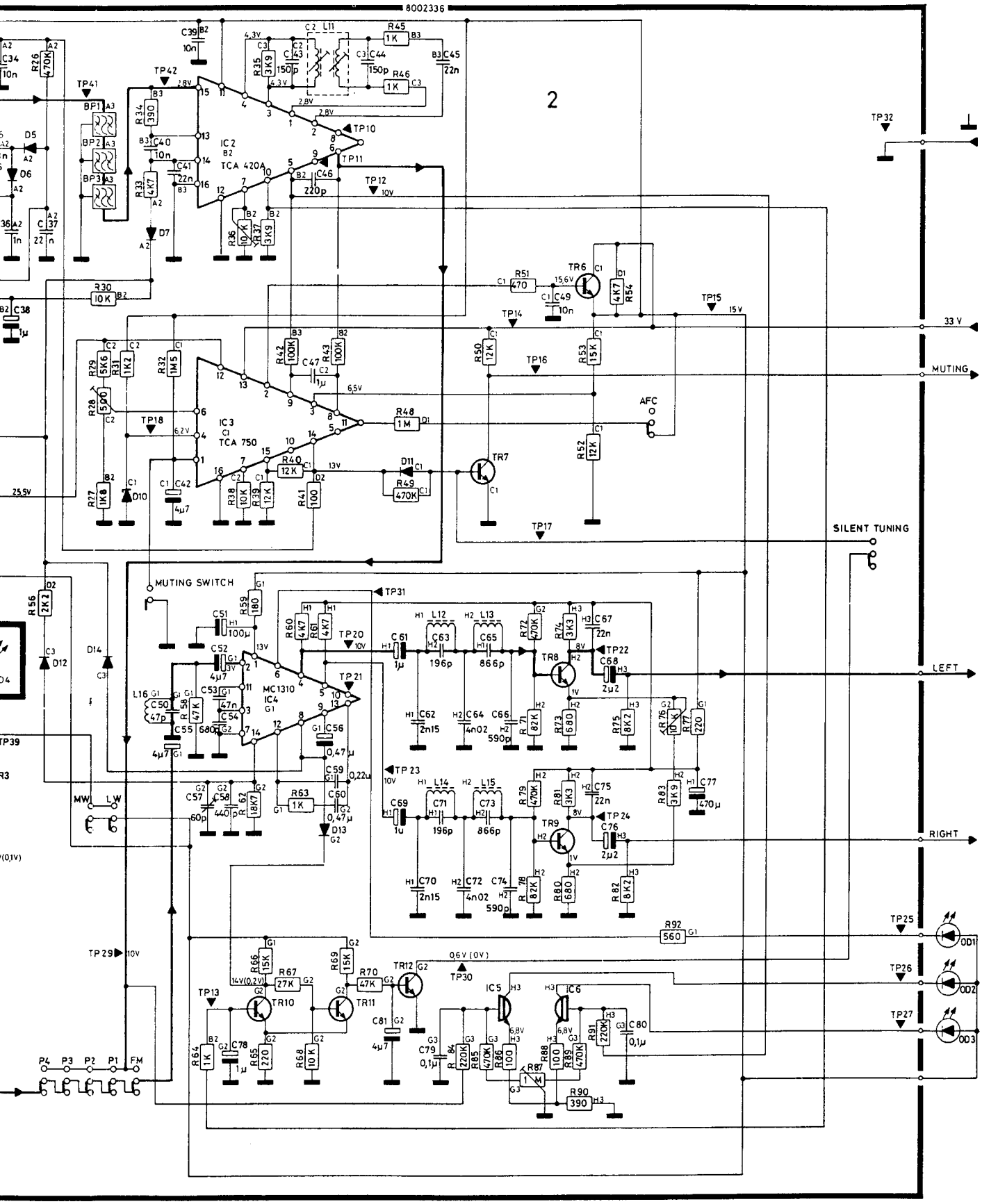

. FM und NF linken Kanal gezeigt./ Signal path is shown for AM (position LW), FM and for LF left channel.

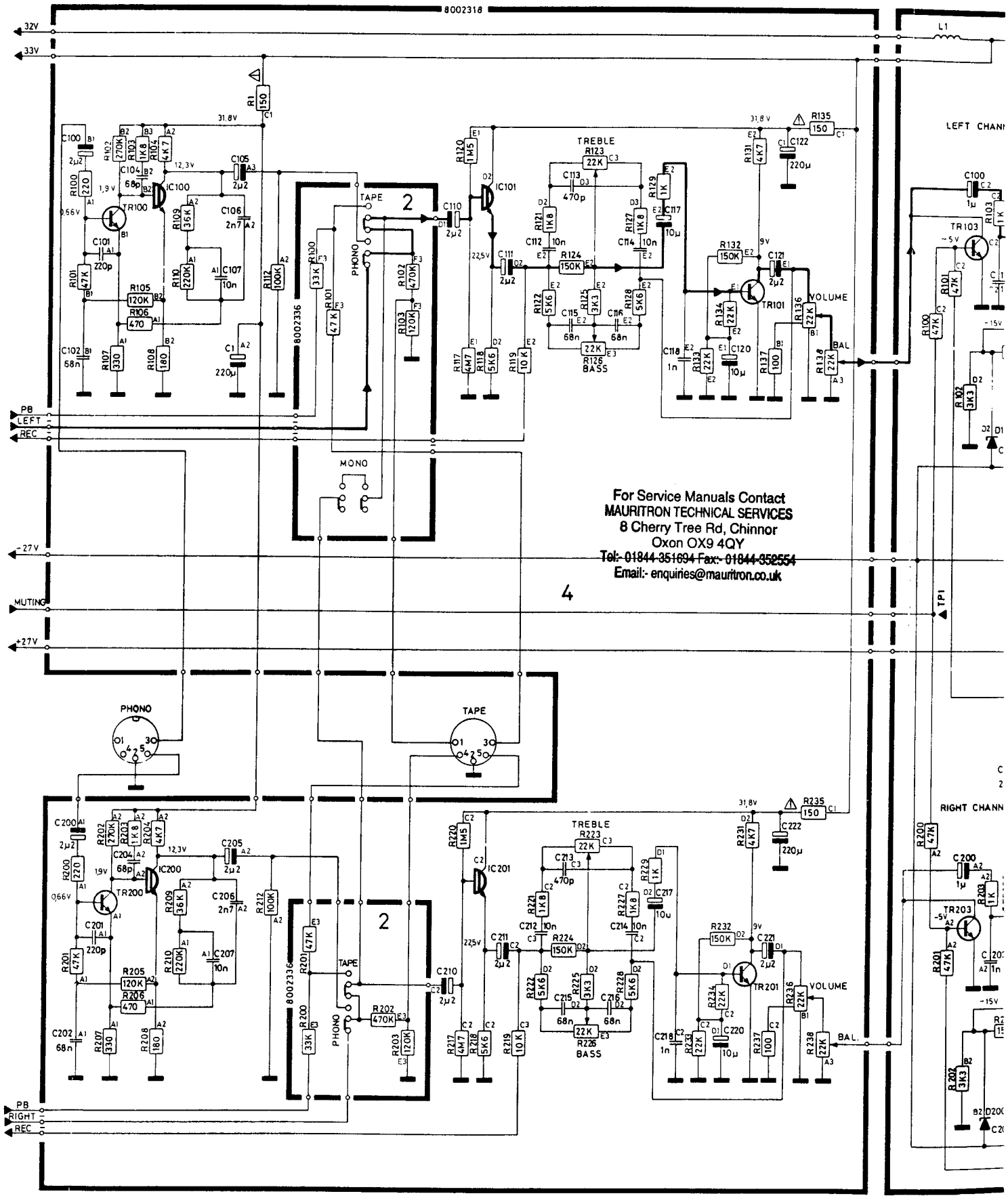
8002318
32V
33V
L1
R1 150
31,8V
C100 2µ2
R100 220
R102 270K
R103 1K8
R104 4K7
C104 68p
12,3V
C105 2µ2
IC100
TR100
1,9V
0,66V
C101 220p
R101 47K
R105 120K
R106 470
R109 36K
R110 220K
C106 2n7
C107 10n
C102 68n
R107 330
R108 180
C1 220µ
R112 100K
8002336
R100 33K
R101 4,7K
TAPE
PHONO
2
R102 470K
R103 120K
C110 2µ2
IC101
R120 1M5
22,5V
C111 2µ2
R117 4M7
R118 5K6
R119 10K
TREBLE
R123 22K
C113 470p
R121 1K8
C112 10n
R124 150K
R122 5K6
R125 3K3
C115 68n
C116 68n
R126 22K
BASS
R129 1K
R127 1K8
C114 10n
C117 10µ
R128 5K6
R131 4K7
R135 150
C122 220µ
R132 150K
C121 2µ2
TR101
R134 22K
R136 22K
VOLUME
R138 22K
BAL
C118 1n
R133 22K
C120 10µ
R137 100
LEFT CHANN
C100 1µ
R103 1K
TR103
-5V
R101 47K
R100 47K
-15V
R102 3K3
PB
LEFT
REC
MONO
For Service Manuals Contact
MAURITRON TECHNICAL SERVICES
8 Cherry Tree Rd, Chinnor
Oxon OX9 4QY
Tel:- 01844-351694 Fax:- 01844-352554
Email:- enquiries@mauritron.co.uk
-27V
MUTING
+27V
4
TP1
PHONO
TAPE
C200 2µ2
R202 270K
R203 1K8
R204 4K7
C204 68p
12,3V
C205 2µ2
IC200
TR200
1,9V
0,66V
R200 220
C201 220p
R201 47K
R205 120K
R206 470
R209 36K
R210 220K
C206 2n7
C207 10n
R212 100K
C202 68n
R207 330
R208 180
8002336
R201 47K
R200 33K
TAPE
PHONO
2
R202 470K
R203 120K
C210 2µ2
IC201
R220 1M5
22,5V
C211 2µ2
R217 4M7
R218 5K6
R219 10K
TREBLE
R223 22K
C213 470p
R221 1K8
C212 10n
R224 150K
R222 5K6
R225 3K3
C215 68n
C216 68n
R226 22K
BASS
R229 1K
R227 1K8
C214 10n
C217 10u
R231 4K7
R235 150
C222 220µ
R232 150K
C221 2µ2
TR201
R234 22K
R236 22K
VOLUME
R238 22K
BAL.
C218 1n
R233 22K
C220 10µ
R237 100
RIGHT CHANN
R200 47K
C200 1µ
R203 1K
TR203
-5V
R201 47K
-15V
R202 3K3
PB
RIGHT
REC

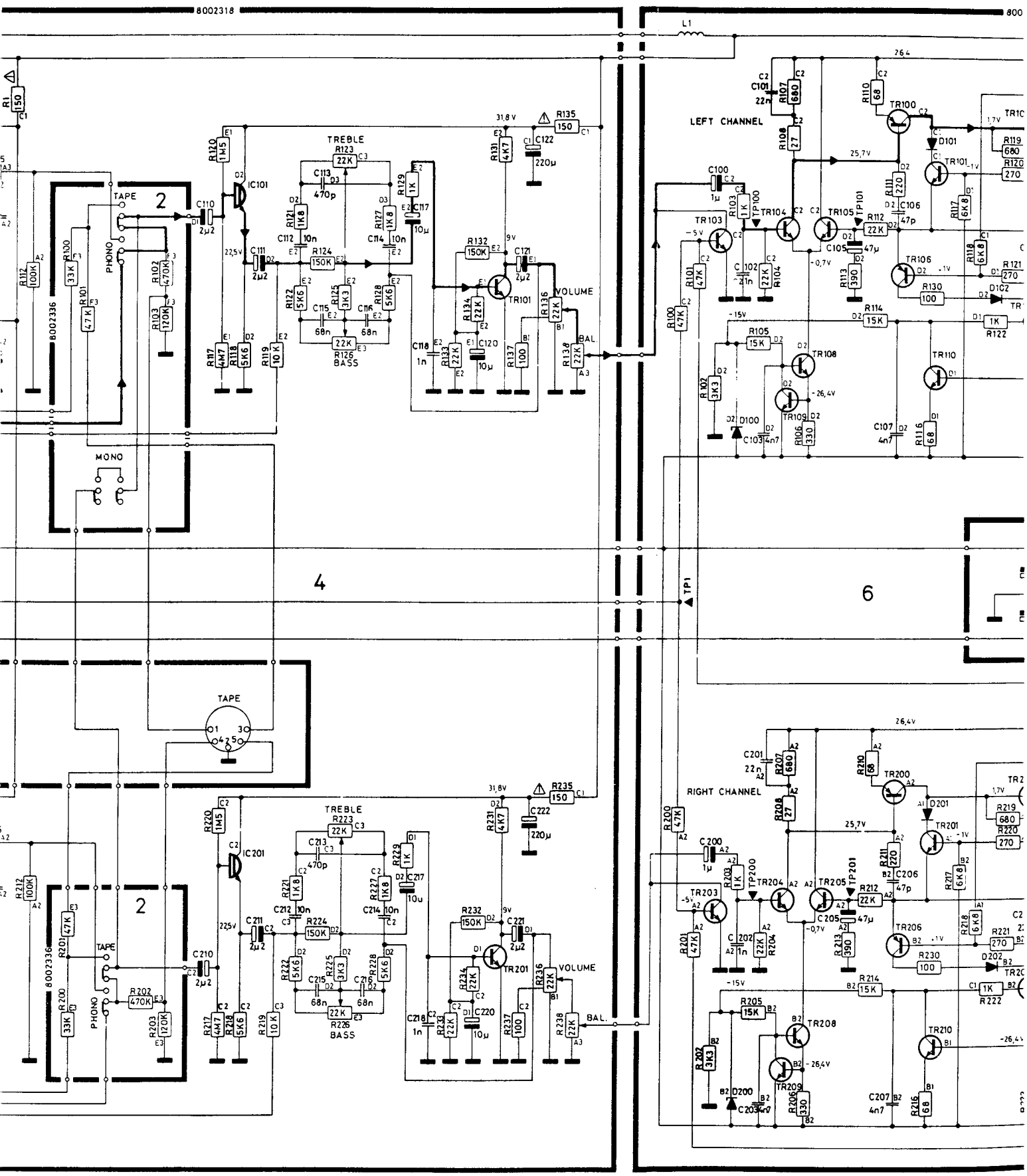
8002318
L1
LEFT CHANNEL
RIGHT CHANNEL
TREBLE
BASS
VOLUME
BAL.
TAPE
PHONO
MONO
IC101
IC201
TR100
TR101
TR103
TR104
TR105
TR106
TR108
TR109
TR110
TR200
TR201
TR203
TR204
TR205
TR206
TR208
TR209
TR210
D100
D101
D102
D200
D201
D202
TP100
TP101
TP200
TP201
TP1
8002336
2
4
6
26,4
25,7V
31,8V
22,5V
9V
-15V
-26,4V
-0,7V
-5V
1,7V
-1V

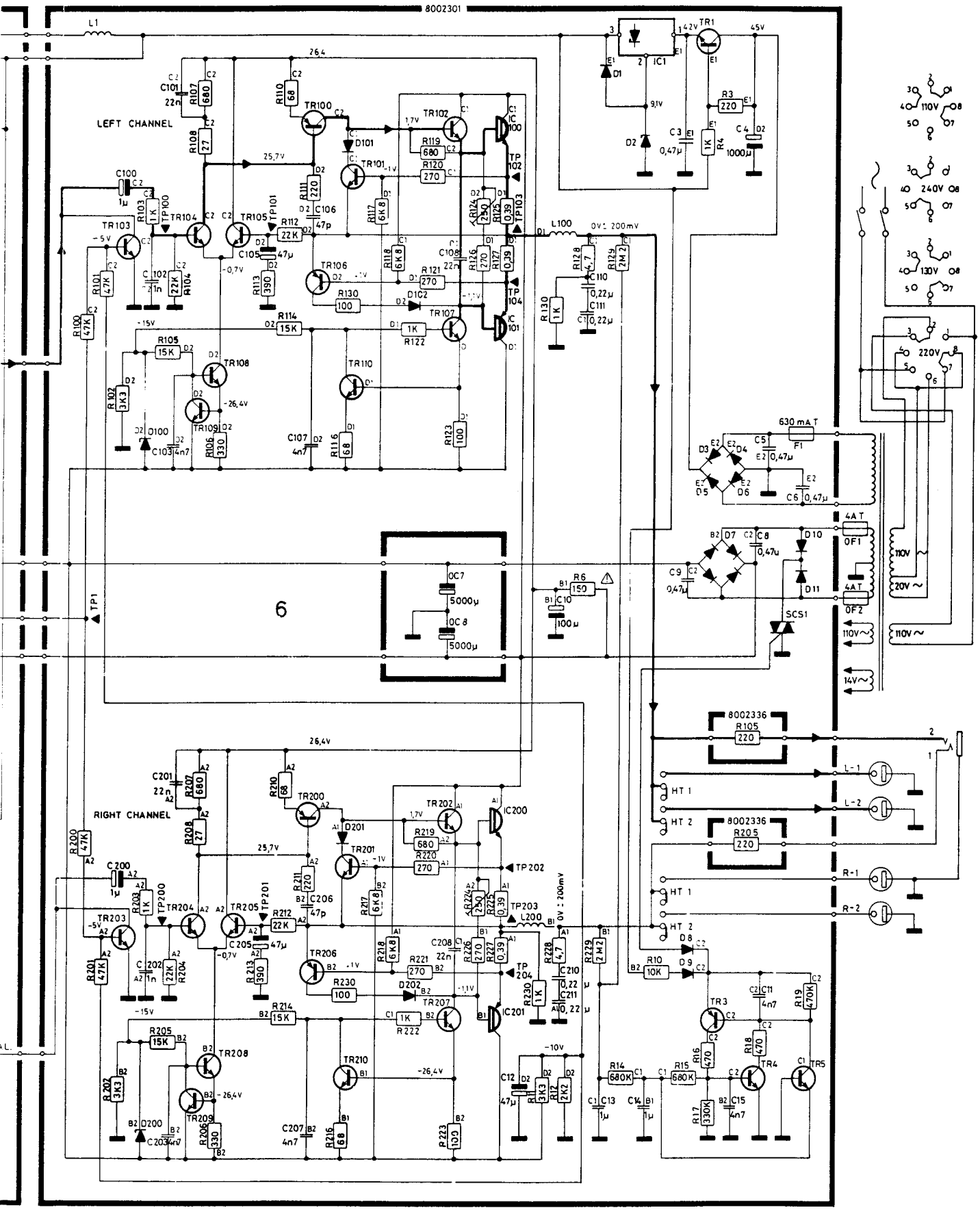
8002301
LEFT CHANNEL
RIGHT CHANNEL
6
8002336
110V
240V
130V
220V
20V ~
110V ~
14V~
630 mA T
4AT
OF1
OF2
SCS1
HT 1
HT 2
L-1
L-2
R-1
R-2
TR1
IC1
TR100
TR101
TR102
TR103
TR104
TR105
TR106
TR107
TR108
TR109
TR110
TR200
TR201
TR202
TR203
TR204
TR205
TR206
TR207
TR208
TR209
TR210
IC100
IC101
IC200
IC201
L100
L200
L1
TP1
TP100
TP101
TP102
TP103
TP104
TP200
TP201
TP202
TP203
TP204
0V: 200mV
26,4
25,7V
26,4V
-26,4V
-15V
-10V
-5V
-0,7V
-1V
-1,1V
1,7V
9,1V
42V
45V