Bang & Olufsen

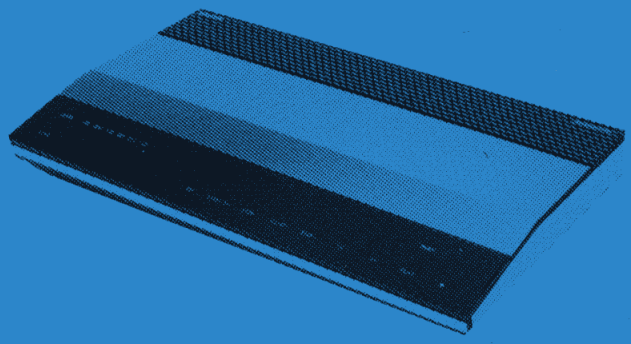

Beocord 4500

Typ 4961, 4962, 4963, 4964, 4965

SERVICEANLEITUNG
MANUEL d'ENTRETIEN

DIAGRAM A (AF and Control)

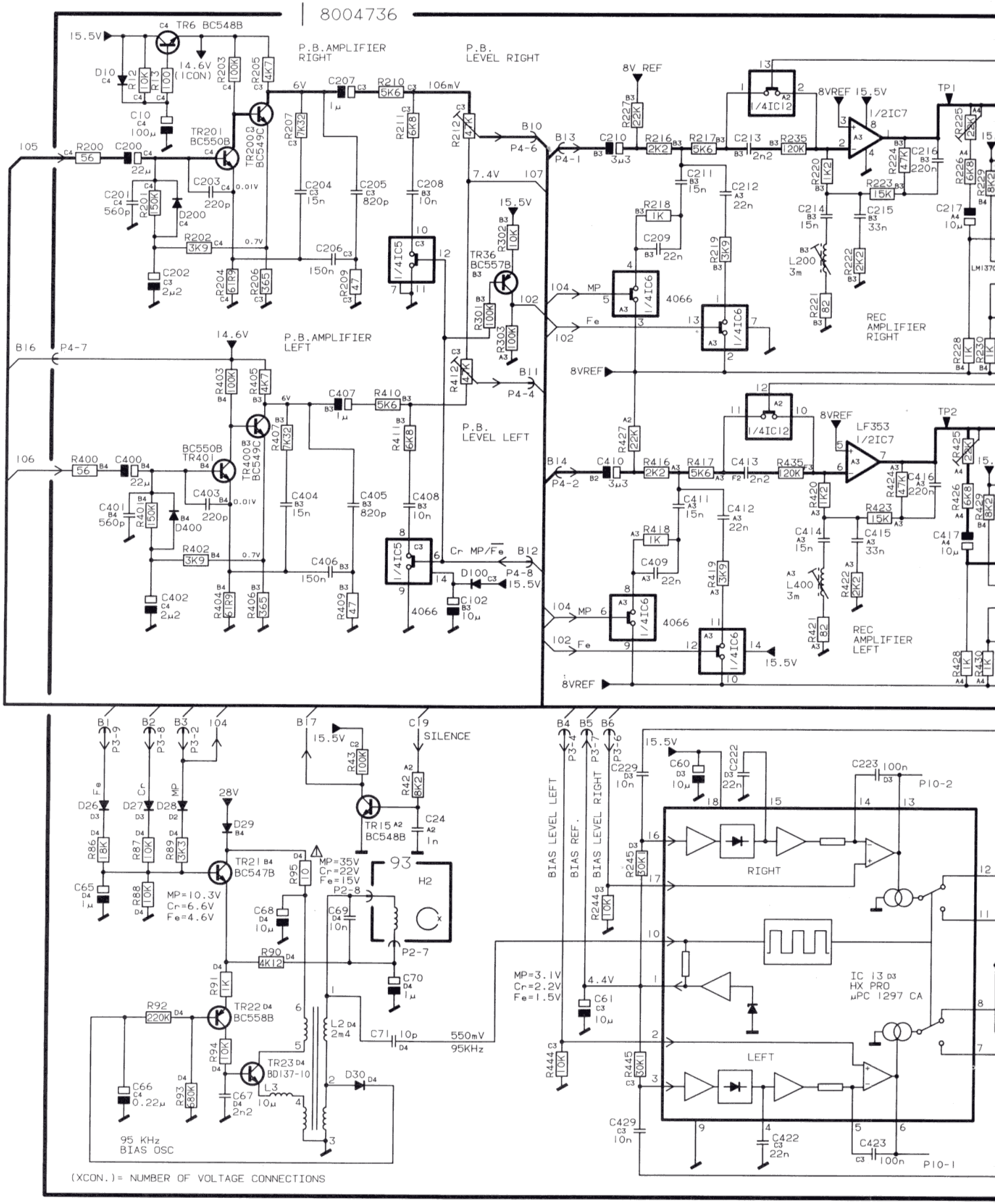

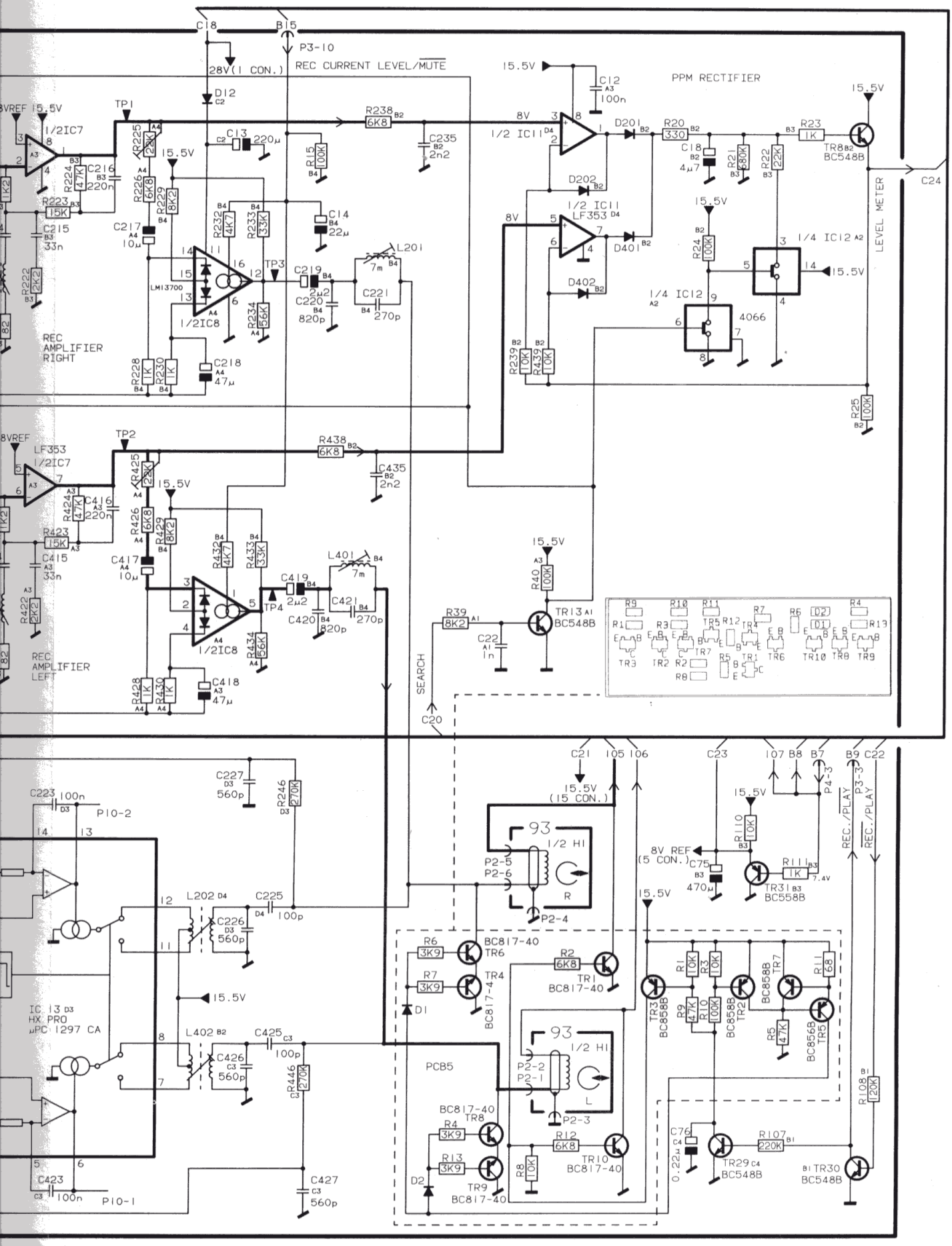
REC CURRENT LEVEL/MUTE
PPM RECTIFIER
LEVEL METER
REC AMPLIFIER RIGHT
REC AMPLIFIER LEFT
SEARCH
REC./PLAY
IC 13 HX PRO µPC 1297 CA
PCB5
LM13700
4066
LF353
BC548B
BC558B
BC817-40
BC858B

DIAGRAM B (Dolby NR, Bias Switch and Tape Type Logic)

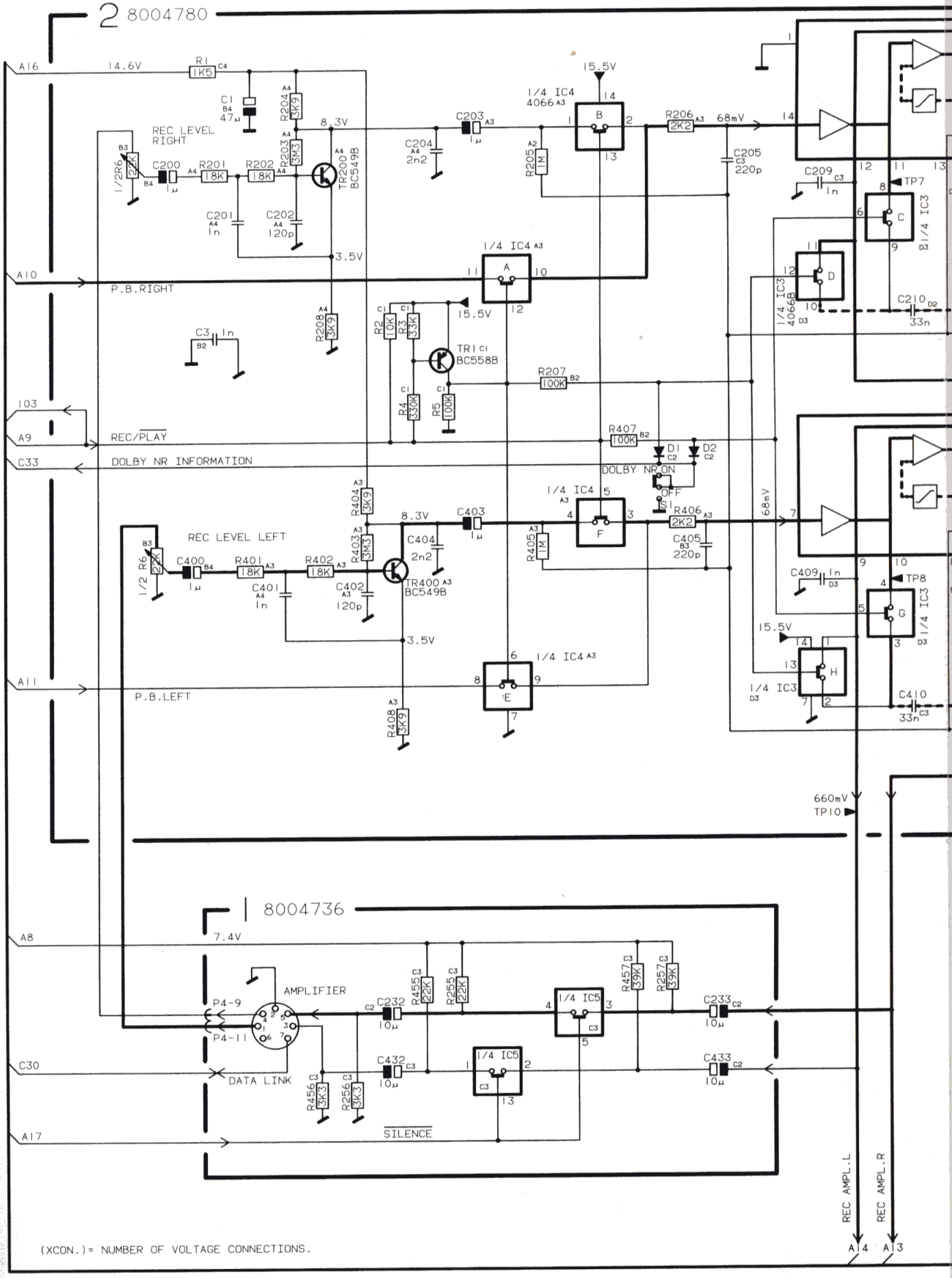

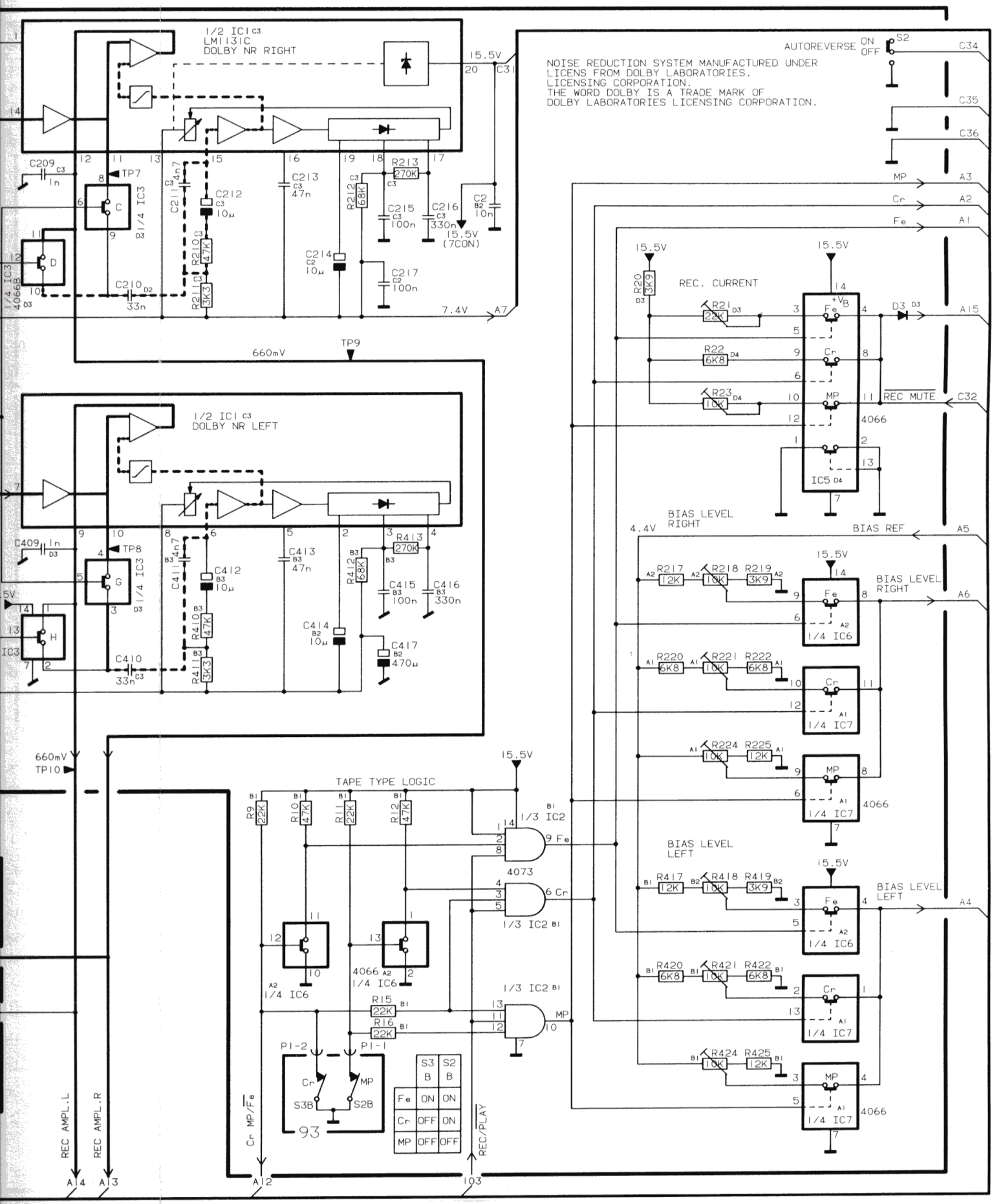
1/2 IC1 C3
LM1131C
DOLBY NR RIGHT
15.5V
C31
NOISE REDUCTION SYSTEM MANUFACTURED UNDER
LICENS FROM DOLBY LABORATORIES.
LICENSING CORPORATION.
THE WORD DOLBY IS A TRADE MARK OF
DOLBY LABORATORIES LICENSING CORPORATION.
AUTOREVERSE ON OFF
S2
C34
C35
C36
C209 C3 1n
TP7
1/4 IC3
C211 4n7
C212 C3 10µ
R210 C3 47K
R211 C3 3K3
C210 D2 33n
C213 C3 47n
C214 C2 10µ
R212 C3 68K
R213 270K
C215 C3 100n
C216 C3 330n
C217 C2 100n
C2 B2 10n
15.5V (7CON)
7.4V
A7
MP
A3
Cr
A2
Fe
A1
15.5V
R20 3K9 D3
REC. CURRENT
R21 22K D3
R22 6K8 D4
R23 10K D4
D3 D3
A15
REC MUTE
C32
4066
IC5 D4
660mV
TP9
1/2 IC1 C3
DOLBY NR LEFT
C409 1n D3
TP8
1/4 IC3
C411 4n7
C412 B3 10µ
R410 B3 47K
R411 B3 3K3
C410 C3 33n
C413 B3 47n
C414 B2 10µ
R412 B3 68K
R413 270K
C415 B3 100n
C416 B3 330n
C417 B2 470µ
BIAS LEVEL RIGHT
4.4V
BIAS REF
A5
R217 12K
R218 10K
R219 3K9
1/4 IC6
BIAS LEVEL RIGHT
A6
R220 6K8
R221 10K
R222 6K8
1/4 IC7
R224 10K
R225 12K
4066
660mV
TP10
TAPE TYPE LOGIC
R9 22K
R10 47K
R11 22K
R12 47K
1/3 IC2
4073
1/3 IC2
4066 A2
1/4 IC6
R15 22K
R16 22K
P1-2
P1-1
S3B
S2B
93
S3 B
S2 B
Fe ON ON
Cr OFF ON
MP OFF OFF
BIAS LEVEL LEFT
R417 12K
R418 10K
R419 3K9
BIAS LEVEL LEFT
A4
R420 6K8
R421 10K
R422 6K8
R424 10K
R425 12K
REC AMPL.L
REC AMPL.R
A14
A13
A12
103
REC/PLAY

DIAGRAM C (Control and Operation)

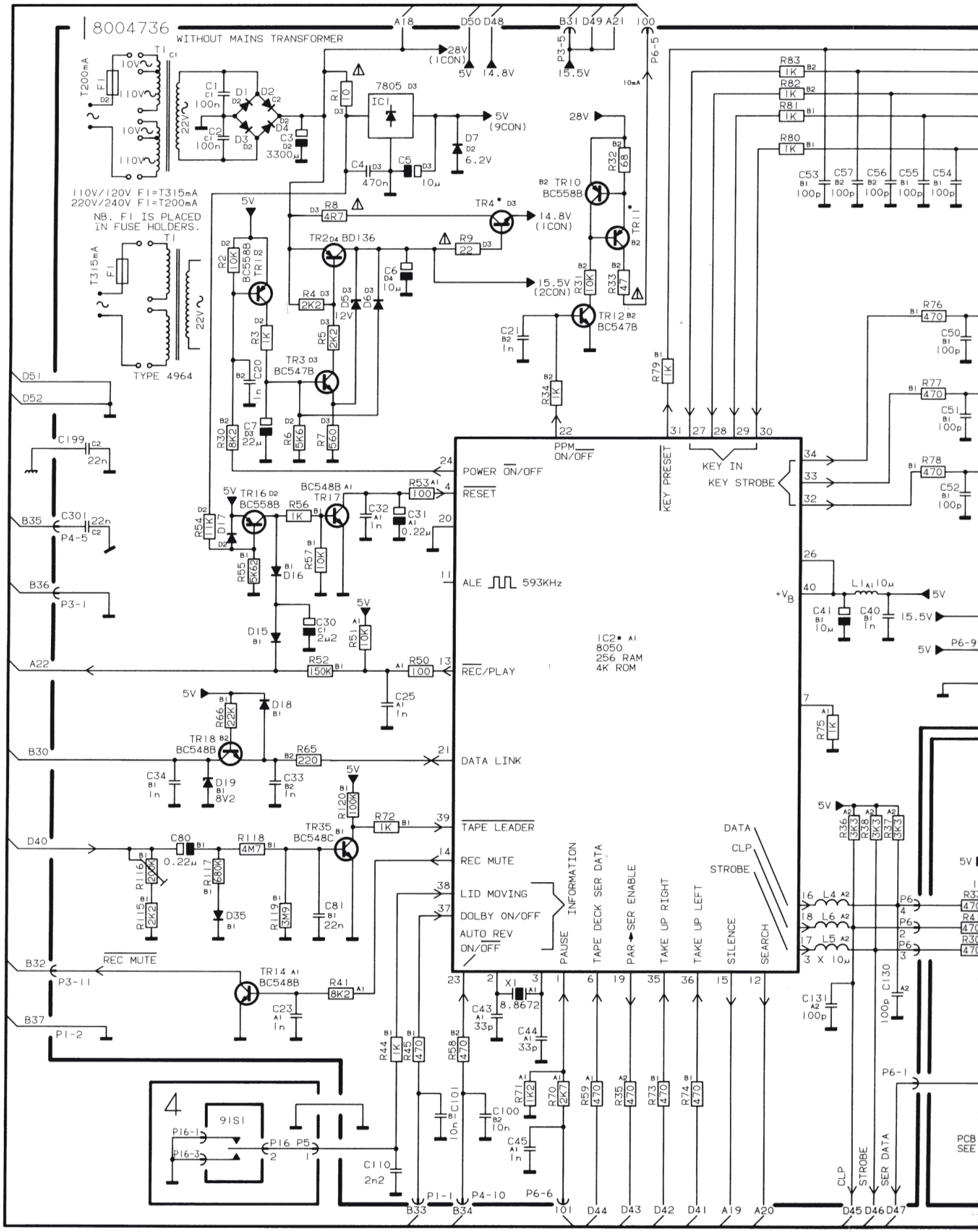

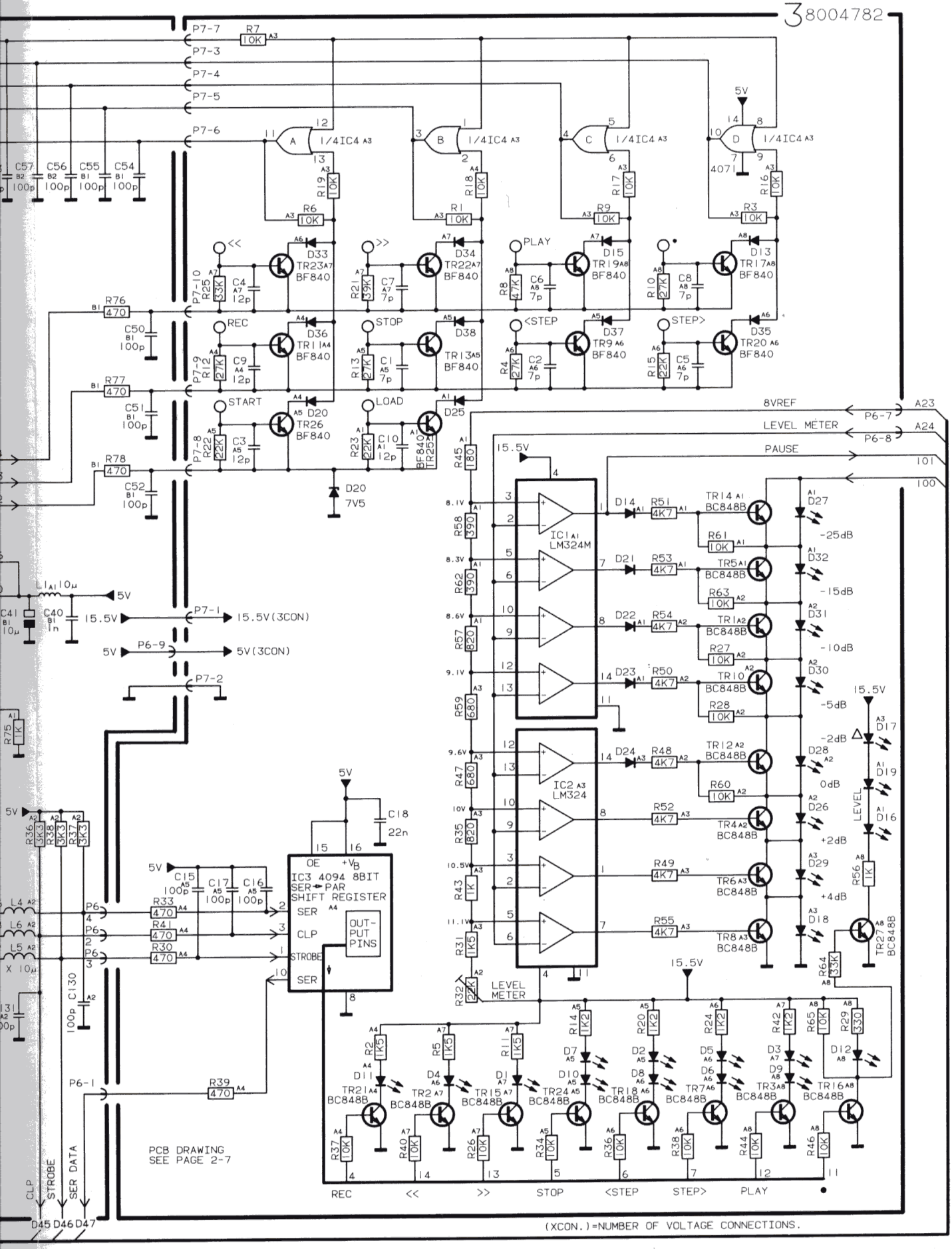
38004782
P7-7
P7-3
P7-4
P7-5
P7-6
R7 10K
1/4IC4
4071
5V
R6 10K
R1 10K
R9 10K
R3 10K
R19 10K
R18 10K
R17 10K
R16 10K
<<
>>
PLAY
REC
STOP
<STEP
STEP>
START
LOAD
D33 TR23 BF840
D34 TR22 BF840
D15 TR19 BF840
D13 TR17 BF840
D36 TR11 BF840
D38 TR13 BF840
D37 TR9 BF840
D35 TR20 BF840
D20 TR26 BF840
D25 BF840 TR25
R76 470
R77 470
R78 470
C50 100p
C51 100p
C52 100p
D20 7V5
8VREF
LEVEL METER
PAUSE
P6-7
P6-8
A23
A24
101
100
15.5V
IC1 LM324M
IC2 LM324
TR14 BC848B
TR5 BC848B
TR1 BC848B
TR10 BC848B
TR12 BC848B
TR4 BC848B
TR6 BC848B
TR8 BC848B
-25dB
-15dB
-10dB
-5dB
-2dB
0dB
+2dB
+4dB
LEVEL
TR27 BC848B
LEVEL METER
P7-1
15.5V(3CON)
P6-9
5V(3CON)
P7-2
IC3 4094 8BIT SER→PAR SHIFT REGISTER
OE
+VB
SER
CLP
STROBE
OUT-PUT PINS
C18 22n
C15 100p
C17 100p
C16 100p
R33 470
R41 470
R30 470
R39 470
P6-1
C130 100p
PCB DRAWING SEE PAGE 2-7
CLP
STROBE
SER DATA
D45 D46 D47
TR21 BC848B
TR2 BC848B
TR15 BC848B
TR24 BC848B
TR18 BC848B
TR7 BC848B
TR3 BC848B
TR16 BC848B
REC
<<
>>
STOP
<STEP
STEP>
PLAY
(XCON.)=NUMBER OF VOLTAGE CONNECTIONS.
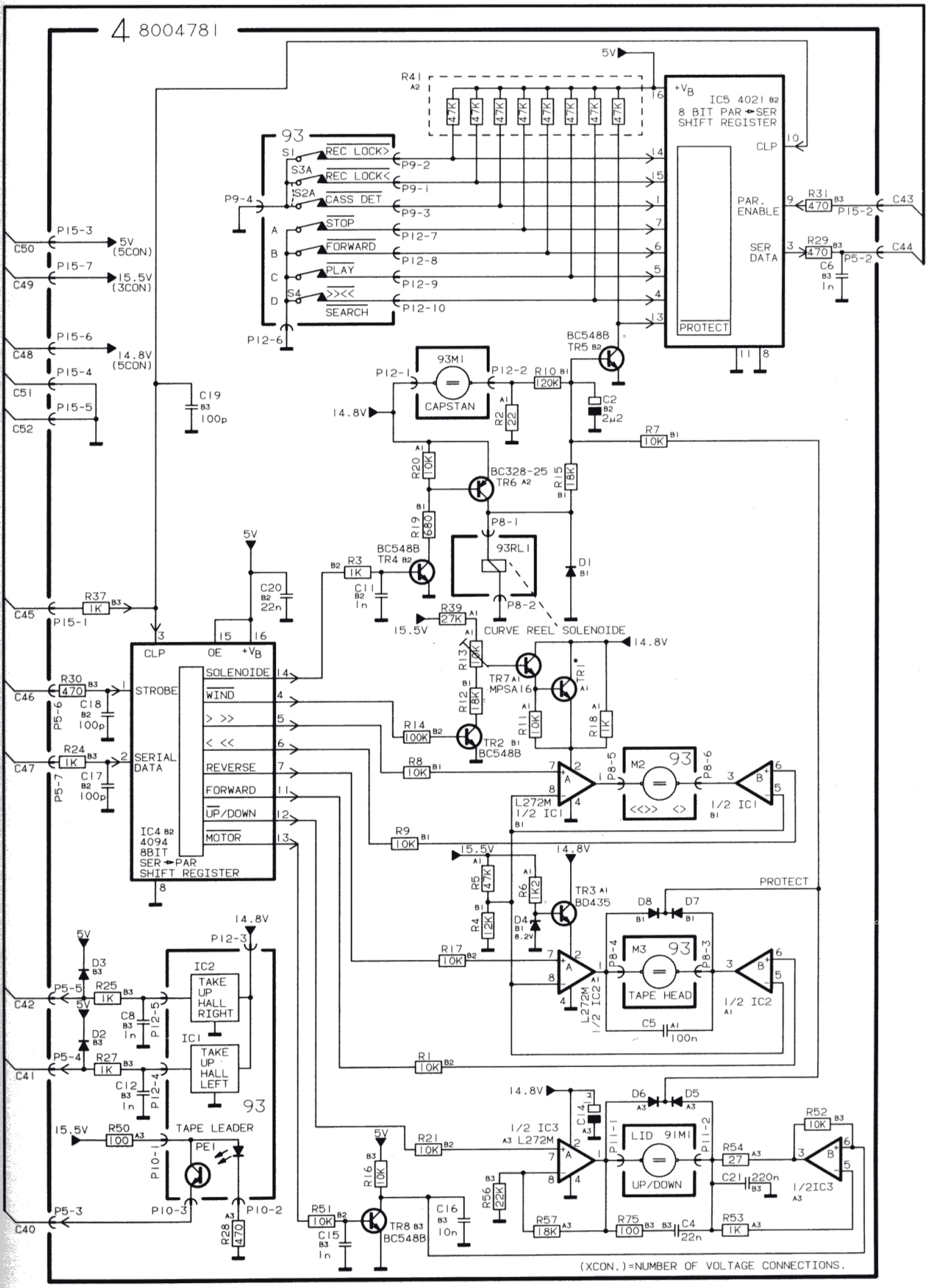
DIAGRAM C (Tape Deck Control)