568

Bang & Olufsen

FOR SERVICE MANUALS
CONTACT:
MAURITRON TECHNICAL SERVICES
www.mauritron.co.uk
TEL: 01844 - 351694
FAX: 01844 - 352554

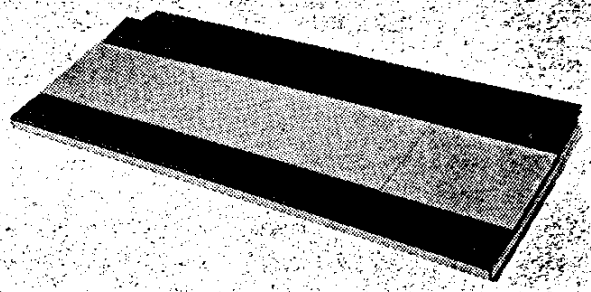

Beocenter 9500

Type 2506, 2508, 2509, 2510

Beocenter 8500

Type 2511, 2512, 2513, 2514

Beocenter 8000

Type 2551, 2552

Beocenter 8500/9500

Corrections

SERVICEANVISNING
SERVICE MANUAL

Bang & Olufsen

INDHOLD

Moduloversigt 1
Tekniske specifikationer 1
Diagrammer 2
Elektrisk stykliste 3
Mekanisk stykliste 4
Justeringer 5
Adskillelse 6
Reparationstips 7
Slutafprøvning 8
Isolationstest 9

CONTENTS

Survey of modules 1
Technical specifications 1
Circuit diagrams 2
List of electrical parts 3
List of mechanical parts 4
Adjustments 5
Dismantling 6
Repair hints 7
Final Testing 8
Insulation test 9

10 AM/FM, RF, IF Decoder ..... diagr. A page 2-2, 2-3

17 FM Tuner ..... diagr. ? page 1-9

20 Tape Recorder ..... diagr. D, E, F page 2-6, 2-7, 2-8

21 Connection Board ..... diagr. F page 2-8

30 CD Servo ..... diagr. J page 2-12

31 CD Decoder ..... diagr. K, L page 2-14

40 System Control and IR ..... diagr. G page 2-9

41 Key Board left ..... diagr. H page 2-10

42 Key Board middle ..... diagr. H page 2-10

43 Key Board right ..... diagr. H page 2-10

44 Display left ..... diagr. I page 2-11

45 Display right ..... diagr. I page 2-11

46 7 Segment Display ..... diagr. I page 2-11

51 Headphone ..... diagr. C page 2-5

52 Mic. Ampl. ..... diagr. B page 2-4

53 Input Select ..... diagr. B page 2-4

54 Volume and Tone Control ..... diagr. B page 2-4

60 Power Supply and Output Ampl. ..... diagr. C page 2-5

61 Speaker Sockets ..... diagr. C page 2-5

62 Rectifiers ..... diagr. C page 2-5

64 Fuses ..... diagr. C page 2-5

65 Power Supply Voltage Regulators ..... diagr. C page 2-5

66 CD On/Off Relay ..... diagr. C page 2-5

68 LINE IN/OUT ..... diagr. B page 2-4

69 IR Transmitter ..... diagr. G page 2-9

93 Tape Mechanism ..... diagr. D, F page 2-6, 2-8

96 CD Mechanism ..... diagr. J page 2-12

FOR SERVICE MANUALS
CONTACT:
MAURITRON TECHNICAL SERVICES
www.mauritron.co.uk
TEL: 01844 - 351694
FAX: 01844 - 352554

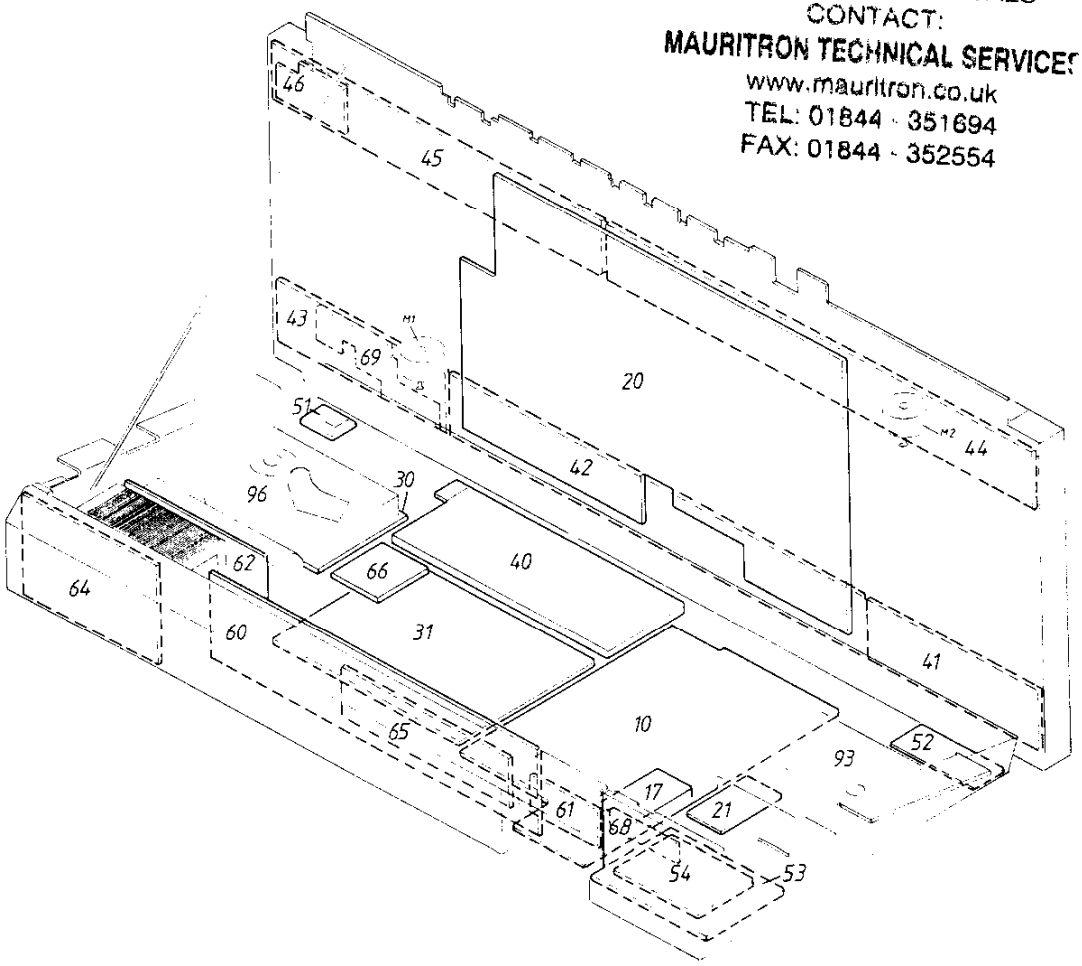

Bang & Olufsen

TECHNICAL SPECIFICATIONS

Beocenter 9500	Type 2506, 2508, 2509, 2510
Beocenter 8500	Type 2511, 2512, 2513, 2514
Operation	Direct, sensi-touch panel
	Beolink 7000, two-way (Type 2506, 2508, 2509, 2510)
	Beolink 1000, one-way
Long-term max. output power IEC	2 x 80 watts/8 ohms
Total harmonic distortion IHF	<0.1%/30 watts 20-20,000 Hz
Dynamic headroom	1 dB/8 ohms
Intermodulation IHF	<0.1 %
Response vs frequency:	
Phono	20-20,000 Hz ±1.5 dB
Tape	20-20,000 Hz ±1.5 dB
Wideband damping factor	50
Input sensitivity/impedance:	
Phono	0.36 mV/47 kohms
Tape 2 – AUX	36 mV/100 kohms
Microphone	0.04 mV/1 kohms
Signal-to-noise ratio:	
Phono A-weighted, 1 W IHF	>78 dB
Tape A-weighted, 1 W IHF	>80 dB
Tape A-weighted, 30 W output	>95 dB
Channel separation 10,000 Hz	>60 dB
Output:	
Tape 2 – AUX	500 mV/1 kohms
External power amplifier	1 V/1 kohms
Headphones	Max. 8 V/220 ohms
Bass control at 40 Hz	±10 dB
Treble control at 12,500 Hz	±8 dB
FM tuner section:	
FM range	76-90 MHz (Type 2509, 2513)
	87.5-108 MHz (Type 2506, 2508, 2510, 2511, 2512, 2514)
FM aerial impedance	75 ohms
Usable sensitivity mono	14 dBf – 1.4 µV
Usable sensitivity stereo	19 dBf – 2.5 µV
50 dB quiting sensitivity mono	19 dBf – 2.5 µV
50 dB quiting sensitivity stereo	40 dBf – 28 µV
Signal-to-noise ratio 65 dBf mono	75 dB
65 dBf stereo	70 dB
Frequency response	20-15,000 Hz ±1 dB
Distortion at 65 dBf mono	0.16%
Distortion at 65 dBf stereo	0.2%
Intermodulation mono	0.1%
Intermodulation stereo	0.1%
Capture ratio	1.7 dB
Adjacent channel selectivity	10 dB
Alternate channel selectivity	70 dB
Spurious response	100 dB
Image response ratio	80 dB
IF response ratio	120 dB
AM suppression	57 dB

Stereo channel separation	45 dB
Subcarrier product rejection	70 dB
AM tuner section:	
LW range	150-350 kHz (Type 2506, 2511)
MW range	520-610 kHz (Type 2506, 2508, 2509, 2510, 2511, 2512, 2513, 2514)
LW sensitivity 20 dB S/N ratio	80 µV
MW sensitivity 20 dB S/N ratio	60 µV
Tape recorder:	
Compact cassette	C46 – C120
Recording system	HX PRO
Tape transport system	Auto Reverse
Search system	Auto Track
Record level	Auto Record Level
Noise reduction system	Auto Dolby B and C
Tape switch	Auto ferro/chrome/metal
Tape head	Sendust
Wow and flutter DIN	<0.15%
Wow and flutter WRMS	<0.09%
Speed deviation	<±1.5%
Fast forward and rewind	85 sec.
Frequency range chrome	30-18,000 Hz ±3 dB
Signal-to-noise ratio CCIR/ARM:	
Metal Dolby	B: >64 dB, C: >73 dB
Chrome Dolby	B: >65 dB, C: >74 dB
Ferro Dolby	B: >63 dB, C: >72 dB
Signal-to-noise ratio IEC/DIN:	
Metal	>56 dB
Chrome	>56 dB
Ferro	>55 dB
Driveability 10,000 Hz, metal	0 dB
Chrome/ferro	-7 dB
Distortion ferro	<2%
Channel separation	>35 dB
Erasure	>70 dB
Erasure frequency	96 kHz
CD player:	
Disc types	12 cm (5"), 8 cm (3")
Frequency range	3-20,000 Hz ±0.3 dB
Signal-to-noise ratio	>100 dB/110 dB A-weighted
Dynamic range	>96 dB
Harmonic distortion	0.0025% at 0 dB
	0.0025% at -20 dB
Channel separation	>101 dB
Channel difference	<0.08 dB
Converter system	2 x 16 bit, 4 x oversampling
Low pass filter analog	Bessel
Damping >20,000 Hz	>50 dB
Phase error between L and R	0 degree at 20-20,000 Hz

FOR SERVICE MANUALS
CONTACT:
MAURITRON TECHNICAL SERVICES
www.mauritron.co.uk
TEL: 01844 - 351694
FAX: 01844 - 352554

Connections:	
Audio Link	Tape 2, Phono (RIAA built-in)
Audio Aux Link	Beovision, 7-pin
Power Link	Beolab speakers, 2 sockets 8-pin
Speaker Link	Beovox speakers, 2 sockets 4-pin
Master Control Link	2 sockets 3 pin
Power supply	110-130-220-240 voltage switch
	(See list of electrical parts concerning power supply fuses)
	Type 2506, 2511 220 V
	Type 2508, 2512 130 V
	Type 2509, 2513 110 V
	Type 2510, 2514 240 V
Power frequency	50-60 Hz
Power consumption	Max. 200 watts
Dimensions W x H x D	76 x 11 x 34 cm
Weight	14 kg
	31 lbs

Subject to change without notice

FOR SERVICE MANUALS
CONTACT:
MAURITRON TECHNICAL SERVICES
www.mauritron.co.uk
TEL: 01844 - 351694
FAX: 01844 - 352554

Options:

Et Beocenter i et Beolinksystem

Options eller situationer beskriver hvordan både audio- og videoprodukterne i et Beolinksystem skal programmeres i den valgte stilling.

Option 1 (Situation 1):

Et audio- og et videosystem placeres i samme rum, så signalerne fra Beolink terminalen kan opfanges af begge systemer samtidigt.

Option 2:

Audio- og videosystemet er placeret i hver sit rum, så signalerne fra Beolink terminalen kun kan opfanges af ét system ad gangen.

Beocenter 8500/9500 i Master Control Link 2-systemet:

Option 3:

Anvendes når der er to audiokilder i samme rum (f.eks.: en MCL 2-enhed og en Beocenter 8500/9500).

Option 4:

Anvendes når der er to audio- og en videokilde i samme rum (f.eks.: MCL 2, Beocenter og Beovision).

Option 0:

Sætter IR-føler ud af funktion, hvilket kan udnyttes f.eks. i butiksvinduer eller ved udstillinger. Der kan dog stadig vælges ny option med Beolink terminalen.

Programmering:

Options programmeres med Beolink terminalen, med Beocenter 8500/9500 i standby:

Tast:	[SOUND], Option nr. [STORE]
Display viser:	Option nr.

Beocenter 8500/9500 er fra fabrikken programmeret til option 1.

Stikdåserne Line in/out og AUX/TV:

Line in/out anvendes ved tilslutning af en equalizer. Husk kortslutningsprop (bestillingsnr. 7220265) når equalizer ikke er tilsluttet.
AUX/TV anvendes ved tilslutning af et Beolink-kompatibelt fjernsyn eller en Bang & Olufsen båndoptager.

Options:

A Beocenter in a Beolink System

Options or situations describe how both the audio and video products in a Beolink system are programmed in the chosen setting.

Option 1 (Situation 1):

An audio and a video system are placed in the same room so the signals from Beolink terminal can be received by both systems at the same time.

Option 2:

The audio and video systems are placed in separate rooms so the signals from Beolink terminal can only be received by one system at a time.

Beocenter 8500/9500 in the Master Control Link 2 system:

Option 3:

Is used when there are two audio sources in the same room (e.g. an MCL 2 unit and a Beocenter 8500/9500).

Option 4:

Is used when there are two audio sources and one video source in the same room (e.g. MCL 2, Beocenter and Beovision).

Option 0:

Puts the IR sensor out of operation; this can be used in shop windows or at exhibitions for example. However, new options can still be selected with Beolink terminal.

Programming:

Options are programmed with Beolink terminal, with Beocenter 8500/9500 in standby:

Key:	[SOUND], Option no. [STORE]
Display shows	Option no.

Beocenter 8500/9500 is programmed at the factory to option 1.

The Line in/out and AUX/TV sockets:

Line in/out is used for connecting an equalizer. Remember short-circuiting fuse (order no. 7220265) when the equalizer is not connected.
AUX/TV is used for connecting a Beolink-compatible television or a Bang & Olufsen cassette recorder.

DIAGRAMFORKLARING

På diagrammerne er der angivet typenumre på transistorer og IC'er. Hvis positionsnummeret er efterfulgt af en stjerne, skal reservedelsnummeret altid benyttes, da denne komponent er specielt udvalgt, f.eks. TR102*.

Komponenttryk og koordinatsystem

De største printplader er forsynet med komponenttryk og et koordinatsystem på både print- og komponentside.
På diagrammerne er enhver komponent forsynet med et koordinatnummer. Dette fortæller i hvilket koordinat på printpladen, komponenten er placeret. Koordinatnumrene er angivet med mindre skrifttype end positionsnumrene.

Styrekredsløb

I visse styrekredsløb er den aktive tilstand angivet med en funktions- eller bogstavsangivelse. Denne kan eksempelvis være $\overline{\text{ST.BY.}}$ = »low« i stand-by-stilling eller ST.BY. = »high« i stand-by-stilling.

Ledningsforbindelser

Ledningsforbindelserne på diagrammerne er samlet i »bundter«. De enkelte ledninger er forsynet med en af følgende koder:

INTERN FORBINDELSE PÅ EN DIAGRAMSIDE

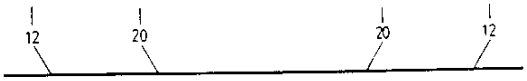

Interne forbindelser på en diagramside angives med et tal. Knækket på ledningen viser, i hvilken retning, den anden ende af ledningen findes.

FORBINDELSE TIL EN ANDEN DIAGRAMSIDE

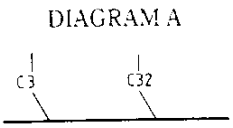

Forbindelsen til en anden diagramside angives med et tal samt et bogstav for det diagram, forbindelsen går til.

Forsyningsspændinger

Alle forsyningsspændinger i diagrammerne er angivet med en pil og en spændingsangivelse.

Eksempel:
Ved siden af spændingsangivelsen står der f.eks. 7 CON. Dette betyder, at den pågældende forsyningsspænding går til 7 steder på den pågældende diagramside (7 CON. = 7 connections).

EXPLANATION OF DIAGRAM

Type numbers of transistors and ICs are indicated on the diagrams.
If the position number is followed by an asterisk the spare part number must always be used because the component in question has been specially selected, e.g. TR102*.

Component print and coordinate system

The largest PCBs have component prints and a coordinate system on both the print and the component side.
On the diagrams every component has a coordinate number. This indicates in which coordinate on the PCB the component is situated. The coordinate numbers are written in smaller print types than the position numbers.

Control Circuit

In certain control circuits the active mode is indicated by a function term or by an abbreviation. This may be e.g. $\overline{\text{ST.BY.}}$ = low in the stand-by mode or ST.BY. = high in the stand-by mode.

Wiring Connections

The wiring connections on the diagrams are assembled in 'bundles'. The individual wires are provided with one of the following codes:

INTERNAL CONNECTION ON ONE DIAGRAM PAGE

Internal connections on a diagram page are indicated by a number. The bend of the wire indicates in which direction the other end of the wire is found.

CONNECTION TO ANOTHER DIAGRAM PAGE

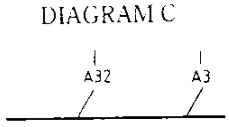

A connection to another diagram page is indicated by a number as well as by a letter of the diagram to which the connection leads.

Supply Voltages

All supply voltages in the diagrams are indicated by an arrow and a voltage indication.

Example:
"7 CON.". This means that the supply voltage in question goes to 7 different places on the diagram page in question (7 CON. = 7 connections).

Symbol for sikkerhedskomponenter

Ved udskiftning af komponenter med dette symbol skal der anvendes komponenter med samme reservedelsnummer. Den nye komponent skal monteres på samme måde som den udskiftede.

Symbol for Safety Components

When replacing components with this symbol components with identical part numbers are to be used. The new component must be fitted in the same way as the one replaced.

MÅLEBETINGELSER

Alle DC spændinger er målt til stel med voltmeter (indre modstand på 10 Mohms).
DC spændinger er opgivet i volt (V). Eks. 0,7 V.
Spændinger på diagram A er målt i stilling FM, spændingerne i parentes er målt i stilling MW, spændingerne i firkantet parentes er målt i stilling LW.
Spændingerne på diagram C er målt med 1 W udgangseffekt.
Signalveje er vist for henholdsvis FM, AM, fjernbetjening og for LF højre kanal.

MEASURING CONDITIONS

All DC voltages are measured in relation to chassis with a voltmeter (internal resistor 10 Mohms).
DC voltages are stated in volts (V). E.g. 0.7 V.
Voltages in diagram A are measured in FM mode signal, the voltages in parentheses are measured in MW mode, the voltages in qua'drangular parentheses are measured in LW mode.
Voltages in diagram C are measured with 1 W output level.
The signal paths are shown for FM, AM, remote control and AF right channel.

Båndoptager

Spændinger: Stilling gengive (333 Hz 250 pWb mm).

AC spændinger opgivet i millivolt (mV).
Eks. 733 mV.

DC spændinger opgivet i volt (V). Eks. 0,7 V.

Signalvejen i optage position er vist i venstre kanal, og gengive position er vist i højre kanal.

Oscillogrammerne på diagram F er målt i stilling »Play«. Læg et bånd i der er indspillet med Dolby B på Beocenter 8500/9500. Under indspilningen må der ikke være tilført eksternt signal.

Oscillogrammerne på diagram D er målt i stilling »Record« uden signal tilført.

Tape recorder

Voltages: Position play back (333 Hz 250 pWb mm).

AC voltages stated in millivolts (mV).
Ex.: 733 mV.

DC voltages stated in volts (V). Ex.: 0.7 V.

The signal path in recording pos. is shown in left channel, and replay pos. is shown in right channel.

The oscillograms in diagram F are measured in "Play" mode. Insert a tape which has been recorded with Dolby B noise reduction in the Beocenter 8500/9500. The recording must not be supplied with any external signal.

The oscillograms in diagram D are measured in "Record" mode without signal supplied.

STELSYMBOLER

Der anvendes 3 forskellige stelsymboler i apparatet.

= Stel

= Signalstel

= Chassis

GROUND SYMBOLS

Three different ground symbols are used in the set.

= Ground

= Signal ground

= Chassis

FOR SERVICE MANUALS
CONTACT:
MAURITRON TECHNICAL SERVICES
www.mauritron.co.uk
TEL: 01844 - 351694
FAX: 01844 - 352554

ADVARSEL!
LITHIUMBATTERI – EKSPLOSIONSFARE
UDSKIFTNING MÅ KUN FORETAGES AF EN SAGKYNDIG OG SOM BESKREVET I SERVICE MANUAL

WARNING!
LITHIUM BATTERY – RISK OF EXPLOSION
TO BE REPLACED BY QUALIFIED SERVICEMAN ONLY AND AS DESCRIBED IN THE SERVICE MANUAL.

ADVARSEL

Kortslutning og overopladning af visse typer lithium-batterier kan medføre voldsom eksplosion.

Ved udskiftning af lithium-batteriet i dette apparat skal følgende iagttages:

Beocenter 8500:
Der **skal** anvendes batteri af samme fabrikat og type som angivet i denne service manual (se side 3-8).

Batteriet skal monteres nøjagtigt som det originale batteri.

Beocenter 9500:
Returner mikroprocessormodulet, bestillingsnr. 8001130 for ombytning.

WARNING

Short circuit and overcharging of some types of lithium batteries may result in a violent explosion.

When replacing the lithium battery in this set note the following:

Beocenter 8500:
Use **only** batteries of the same make and type as mentioned in this service manual (see page 3-8).

Place the battery exactly like the old one.

Beocenter 9500:
Return the microprocessor module, part no. 8001130 for replacement.

CLASS 1
LASER PRODUCT

FOR SERVICE MANUALS
CONTACT:
MAURITRON TECHNICAL SERVICES
www.mauritron.co.uk
TEL: 01844 - 351694
FAX: 01844 - 352554

Explanation of the fuse symbols used in the set

Explanation des symboles du fusible utilisés dans l'appareil

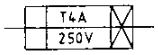

Replace with same type 4 ampere 250 volts slow acting fuse.
Remplacer par un fusible retardè de même type et de 4 ampères 250 volts.

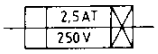

Replace with same type 2.5 ampere 250 volts slow acting fuse.
Remplacer par un fusible retardè de même type et de 2.5 ampères 250 volts.

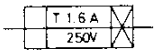

Replace with same type 1.6 ampere 250 volts slow acting fuse.
Remplacer par un fusible retardè de même type et de 1.6 ampères 250 volts.

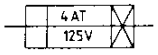

Replace with same type 4 ampere 125 volts slow acting fuse.
Remplacer par un fusible retardè de même type et de 4 ampères 125 volts.

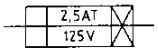

Replace with same type 2.5 ampere 125 volts slow acting fuse.
Remplacer par un fusible retardè de même type et de 2.5 ampères 125 volts.

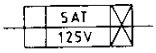

Replace with same type 5 ampere 125 volts slow acting fuse.
Remplacer par un fusible retardè de même type et de 5 ampères 125 volts.

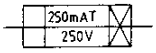

Replace with same type 250 milliamperes 250 volts slow acting fuse.
Remplacer par un fusible retardè de même type et de 250 milliampères 250 volts.

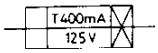

Replace with same type 400 milliamperes 125 volts slow acting fuse.
Remplacer par un fusible retardè de même type et de 400 milliampères 125 volts.

FOR SERVICE MANUALS
CONTACT:
MAURITRON TECHNICAL SERVICES
www.mauritron.co.uk
TEL: 01844 - 351694
FAX: 01844 - 352554

1-9

The FM TUNER is a single unit.
With failure in this unit we recommend replacing the whole unit.
However the part nos. of semi-conductors are in the list of semi-conductors.

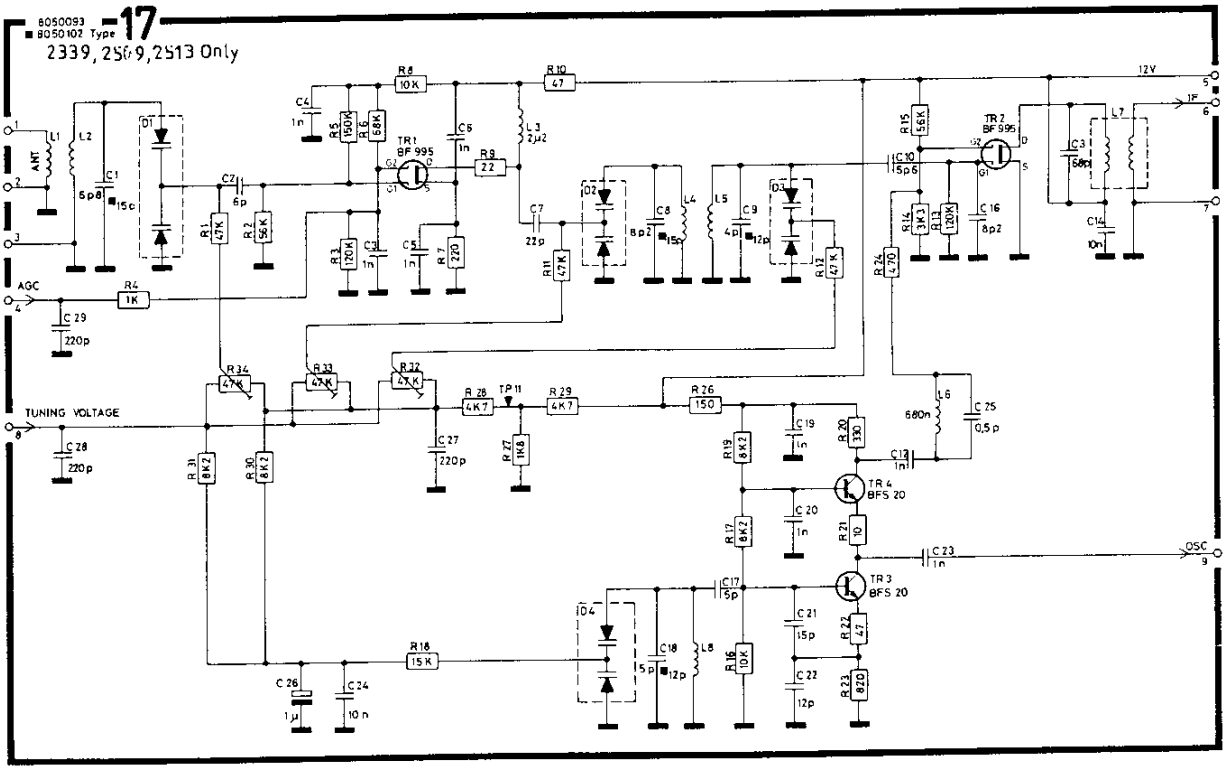

2-1

PLUG SURVEY

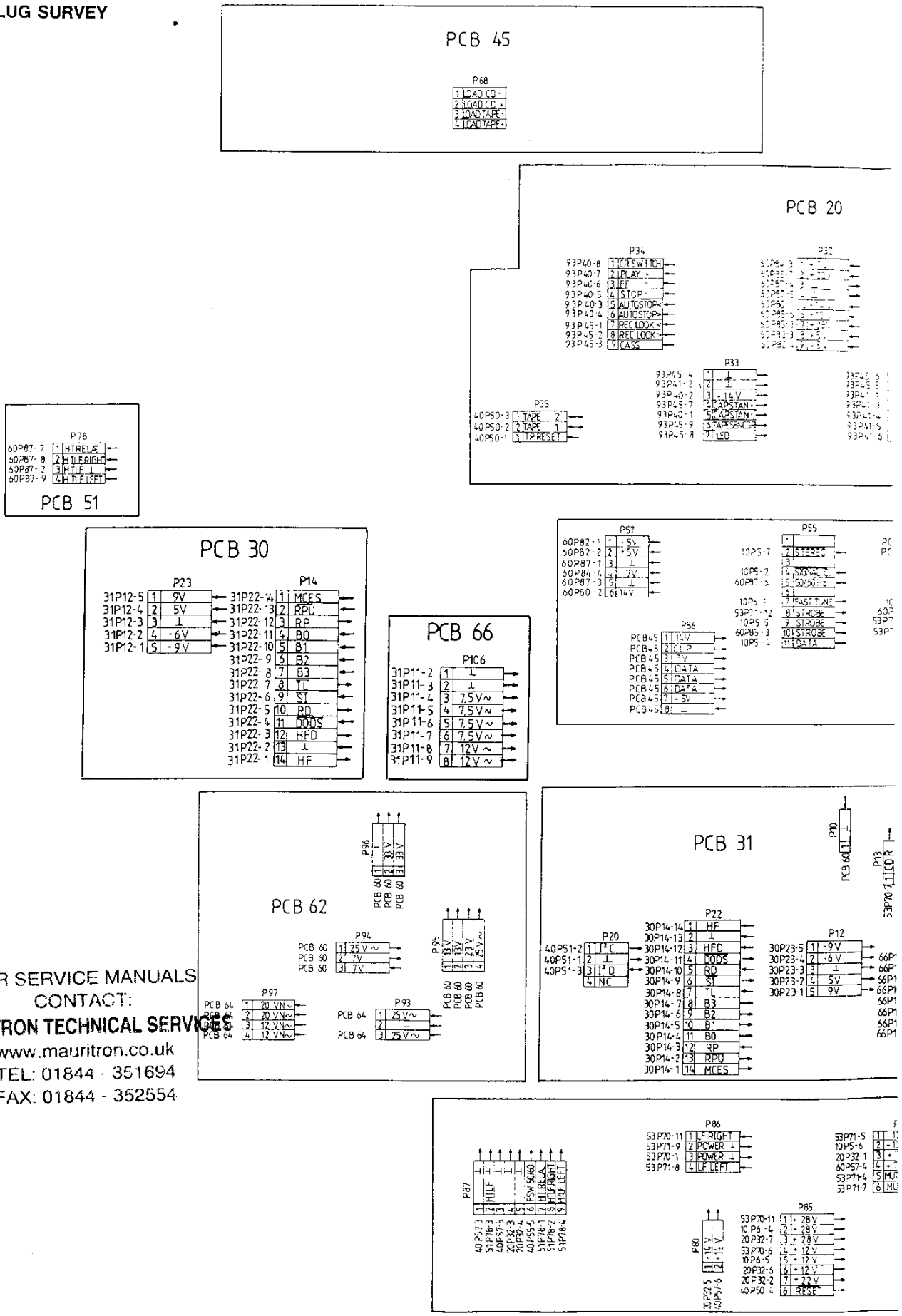

FOR SERVICE MANUALS
CONTACT:
MAURITRON TECHNICAL SERVICES
www.mauritron.co.uk
TEL: 01844 - 351694
FAX: 01844 - 352554

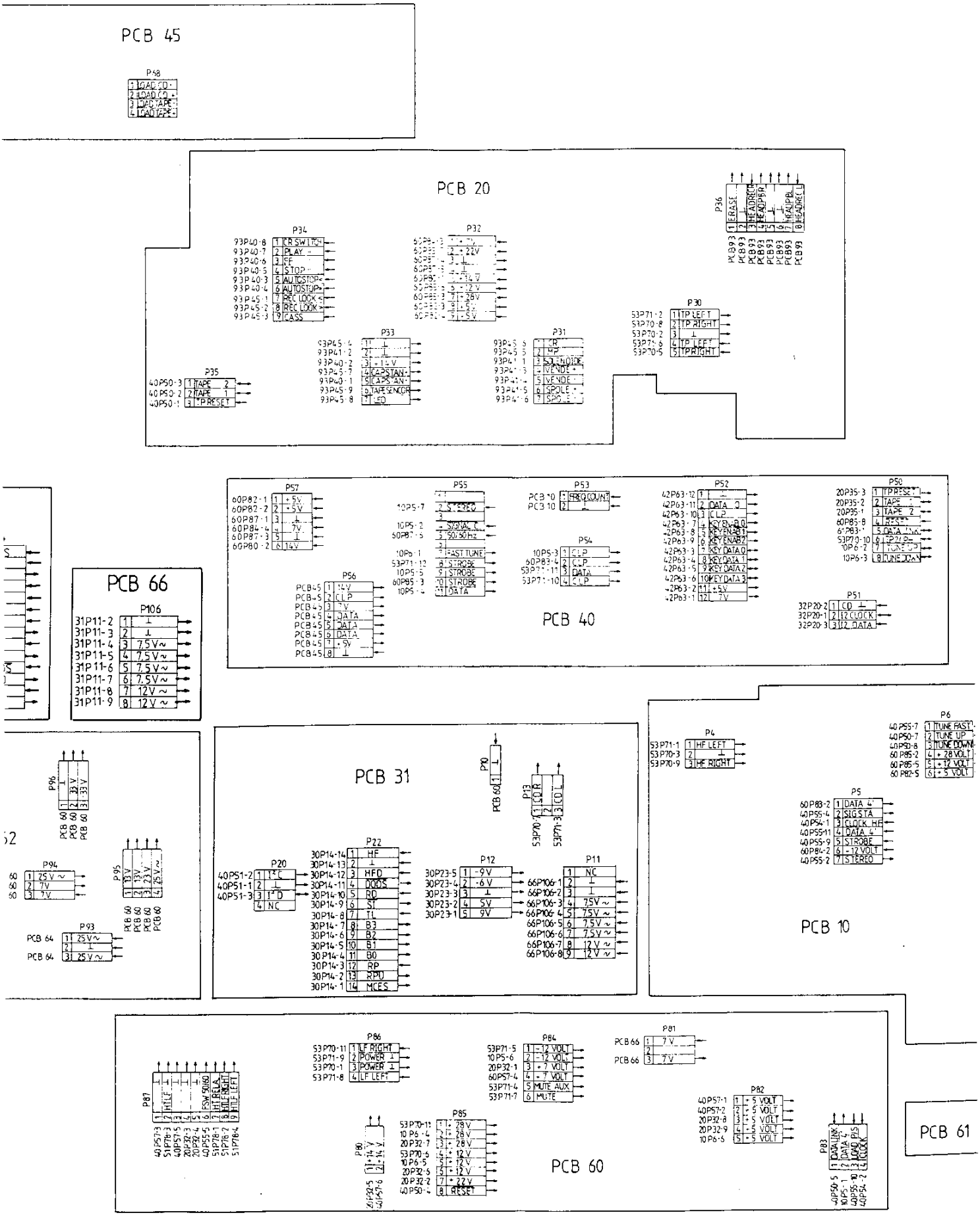
PCB 45
P48
PCB 20
P34
P32
P36
P30
P33
P31
P35
PCB 66
P106
PCB 40
P57
P55
P53
P52
P50
P56
P54
P51
PCB 31
P96
P94
P95
P93
P20
P22
P12
P11
P0
P13
PCB 10
P4
P6
P5
PCB 60
P87
P86
P84
P81
P82
P85
P80
P83
PCB 61

Bang & Olufsen

FOR SERVICE MANUALS
CONTACT:
MAURITRON TECHNICAL SERVICES
www.mauritron.co.uk
TEL: 01844 - 351694
FAX: 01844 - 352554

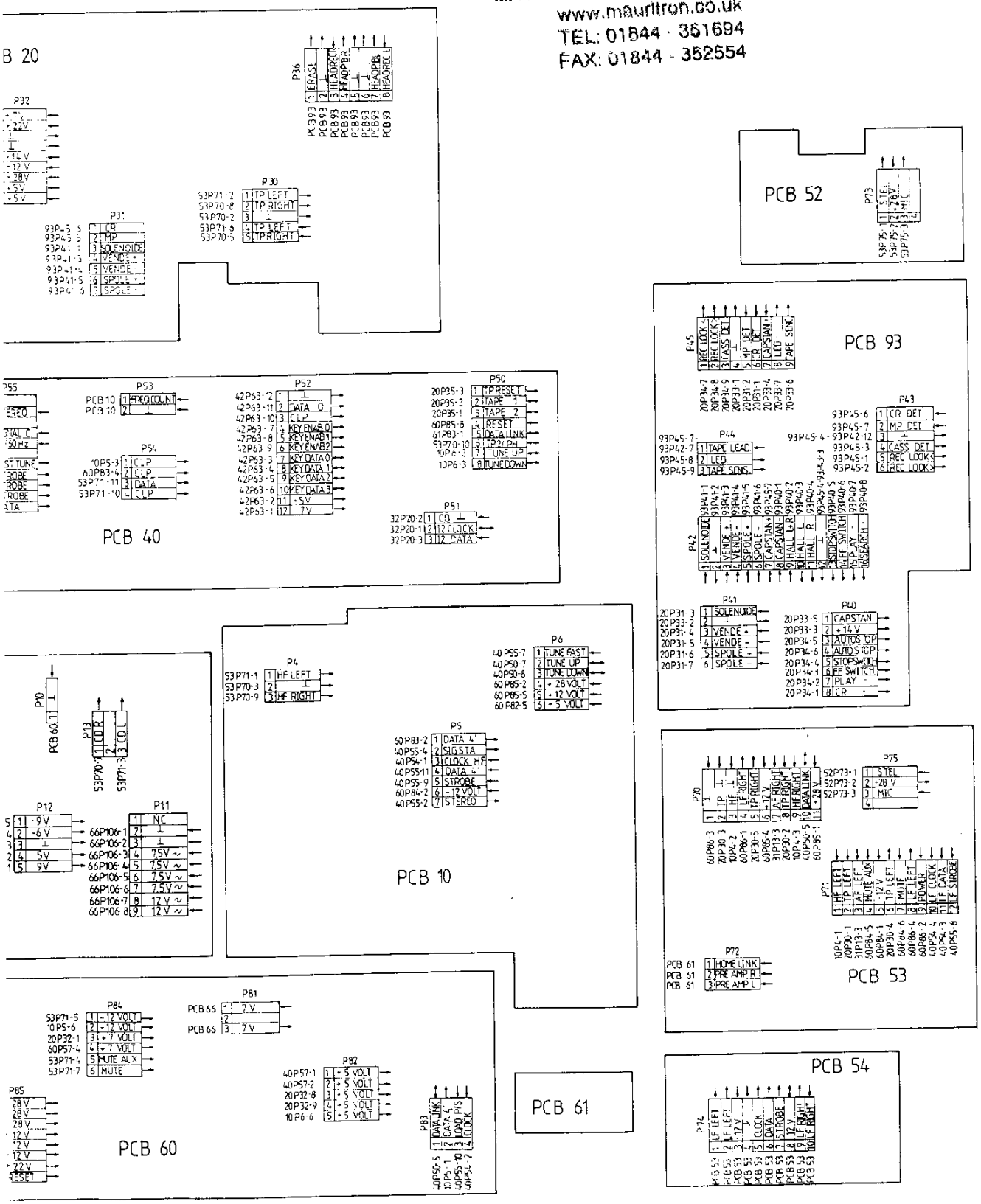

DIAGRAM A (AM-FM, Tuner, IF, Stereo Decoder, Type 2508, 2509, 2510, 2512, 2513, 2514)

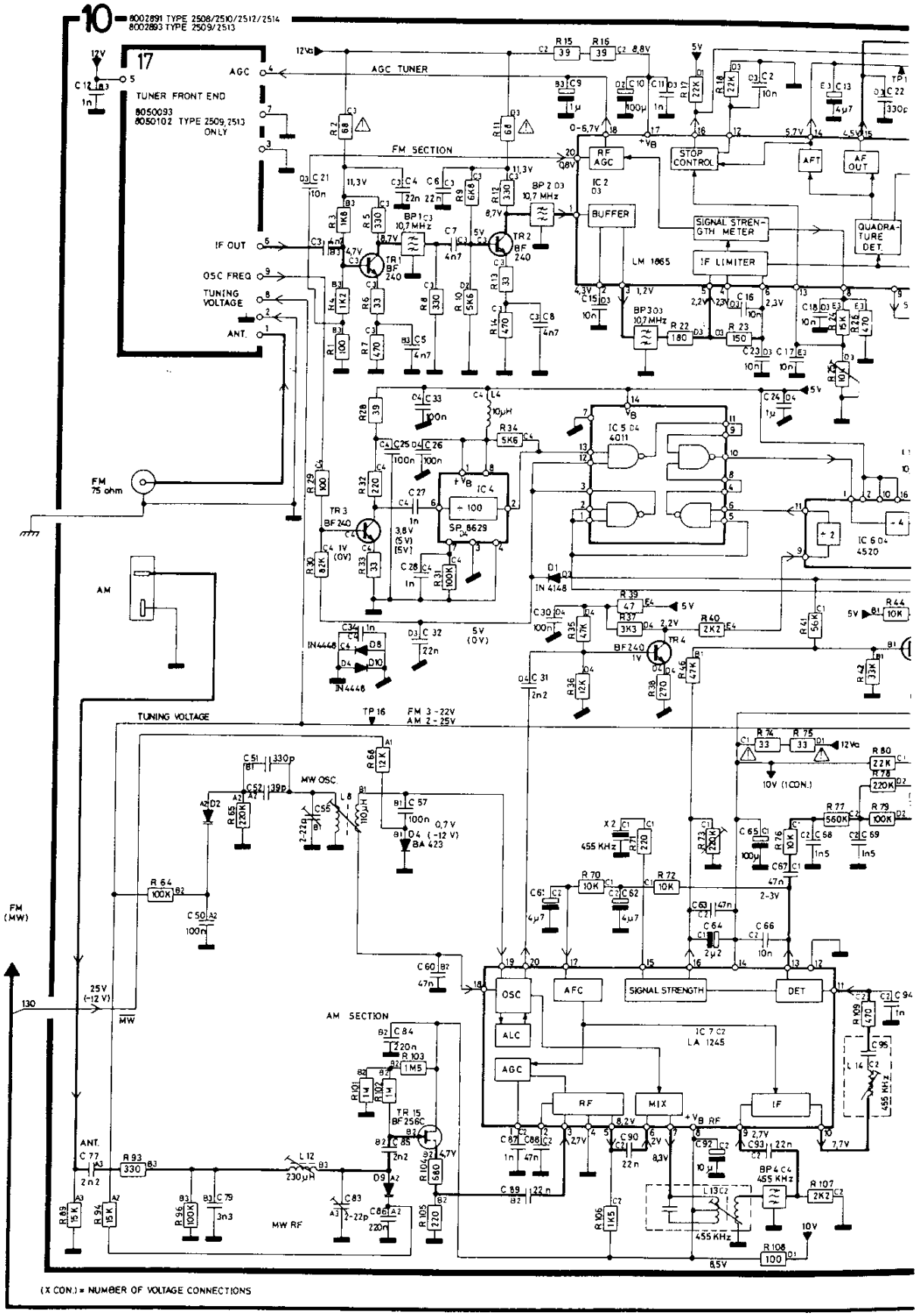

Stereo Decoder, Type 2508, 2509, 2510, 2512, 2513, 2514)

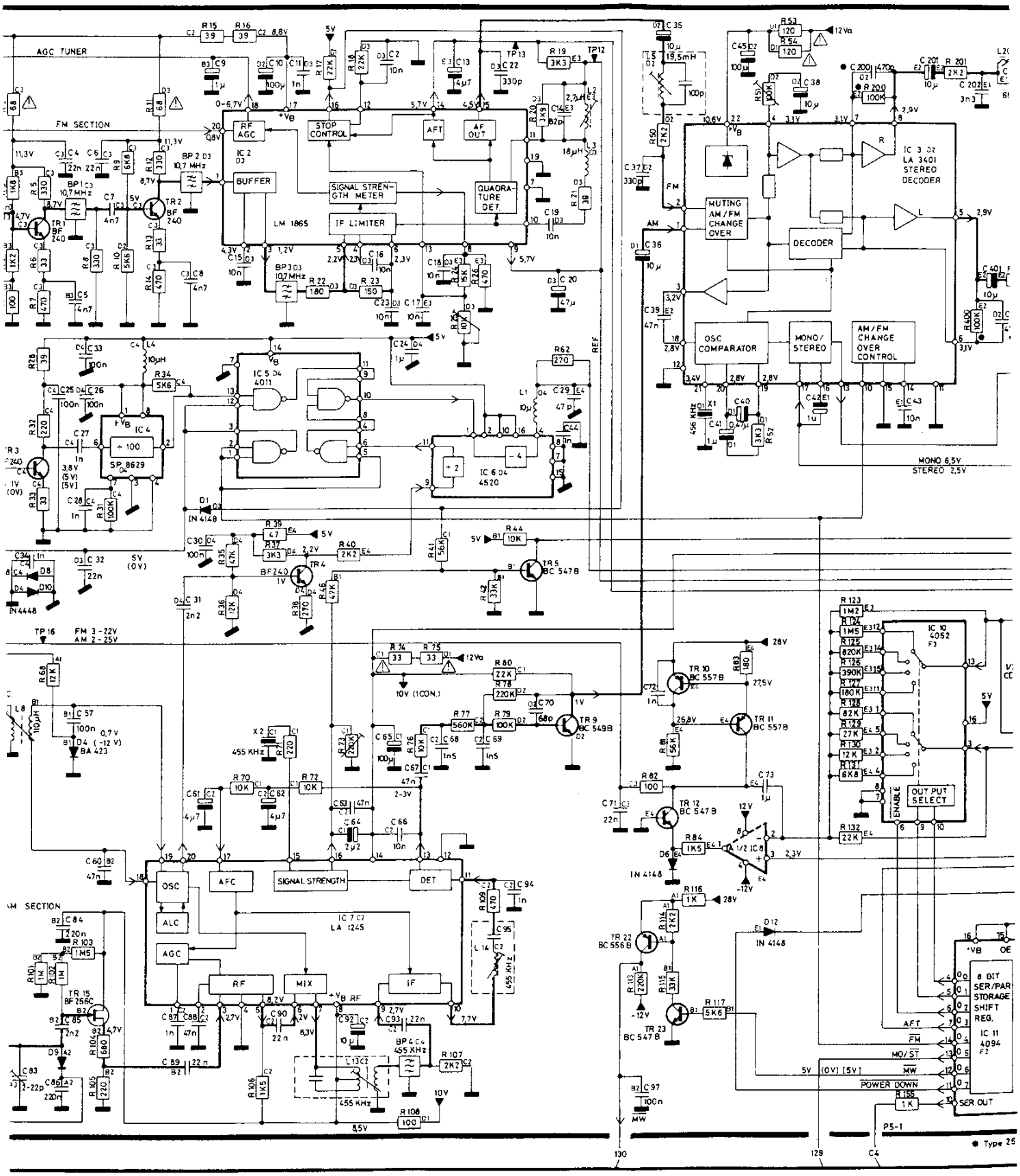

FOR SERVICE MANUALS
CONTACT:
MAURITRON TECHNICAL SERVICES
www.mauritron.co.uk
TEL: 01844 - 351694
FAX: 01844 - 352554

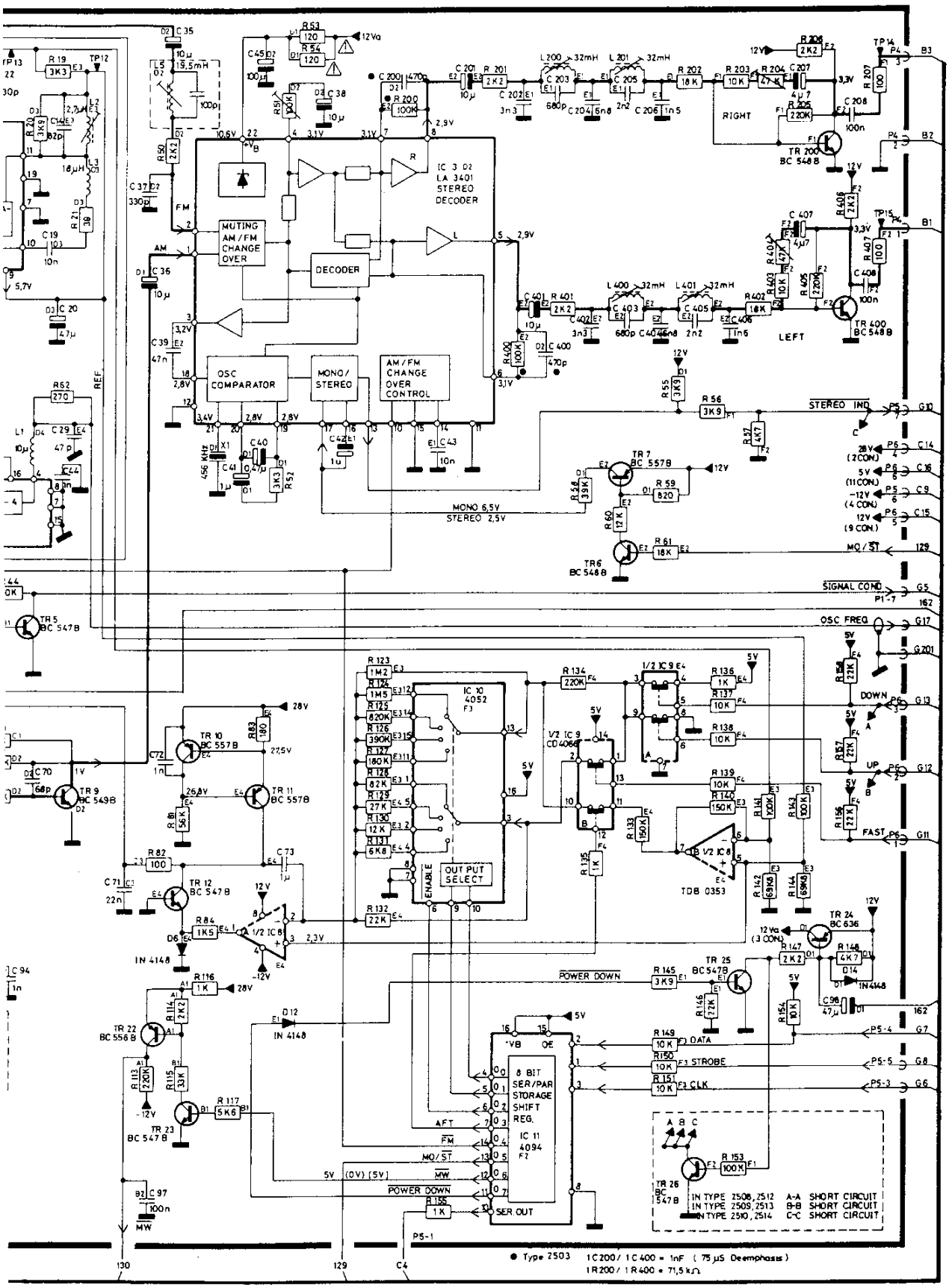

2-3

DIAGRAM A (AM-FM, Tuner, IF, Decoder, Type 2506, 2511)

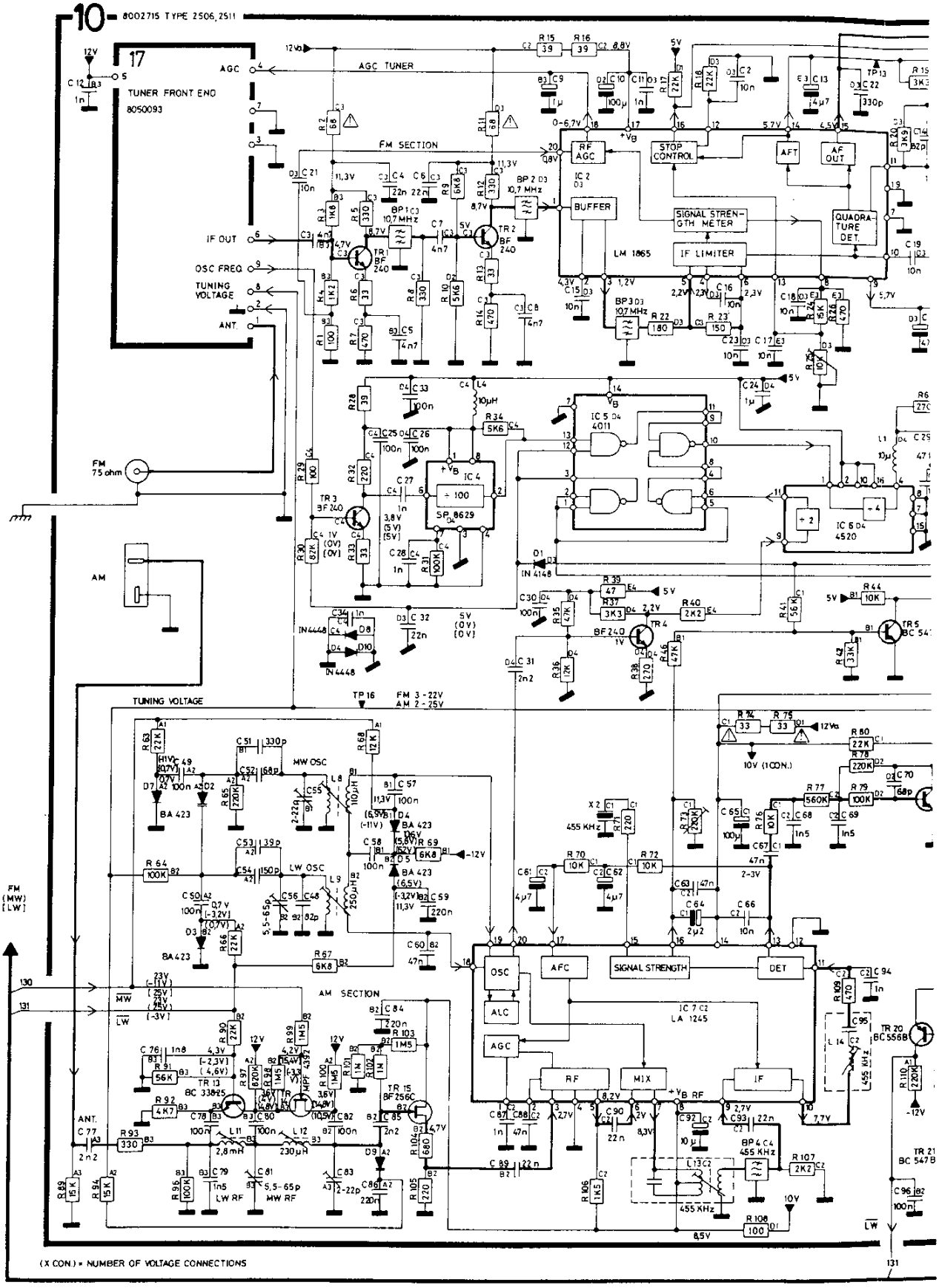

Decoder, Type 2506, 2511)

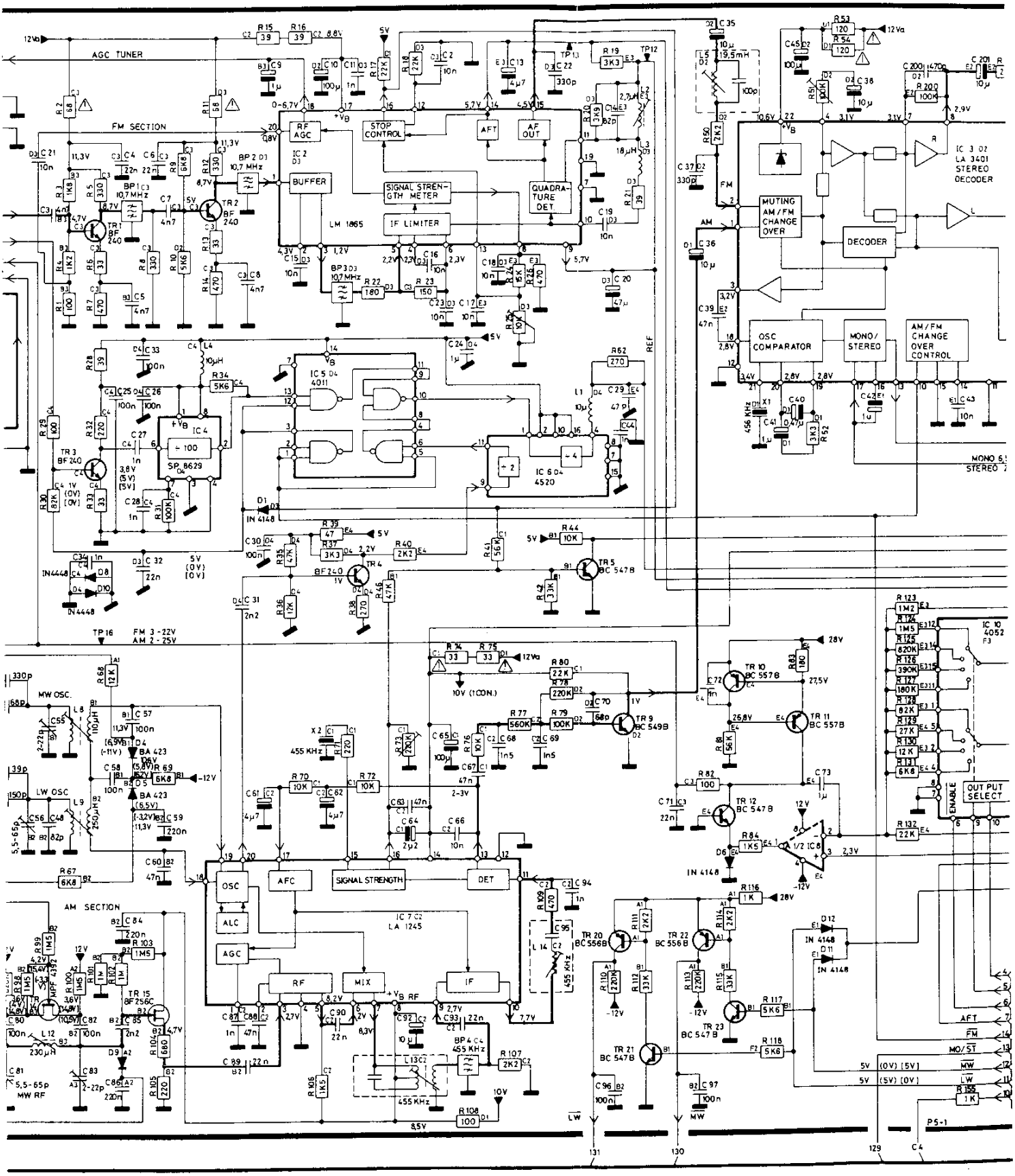

FOR SERVICE MANUALS
CONTACT:
MAURITRON TECHNICAL SERVICES
www.mauritron.co.uk
TEL: 01844 - 351694
FAX: 01844 - 352554

Bang & Olufsen

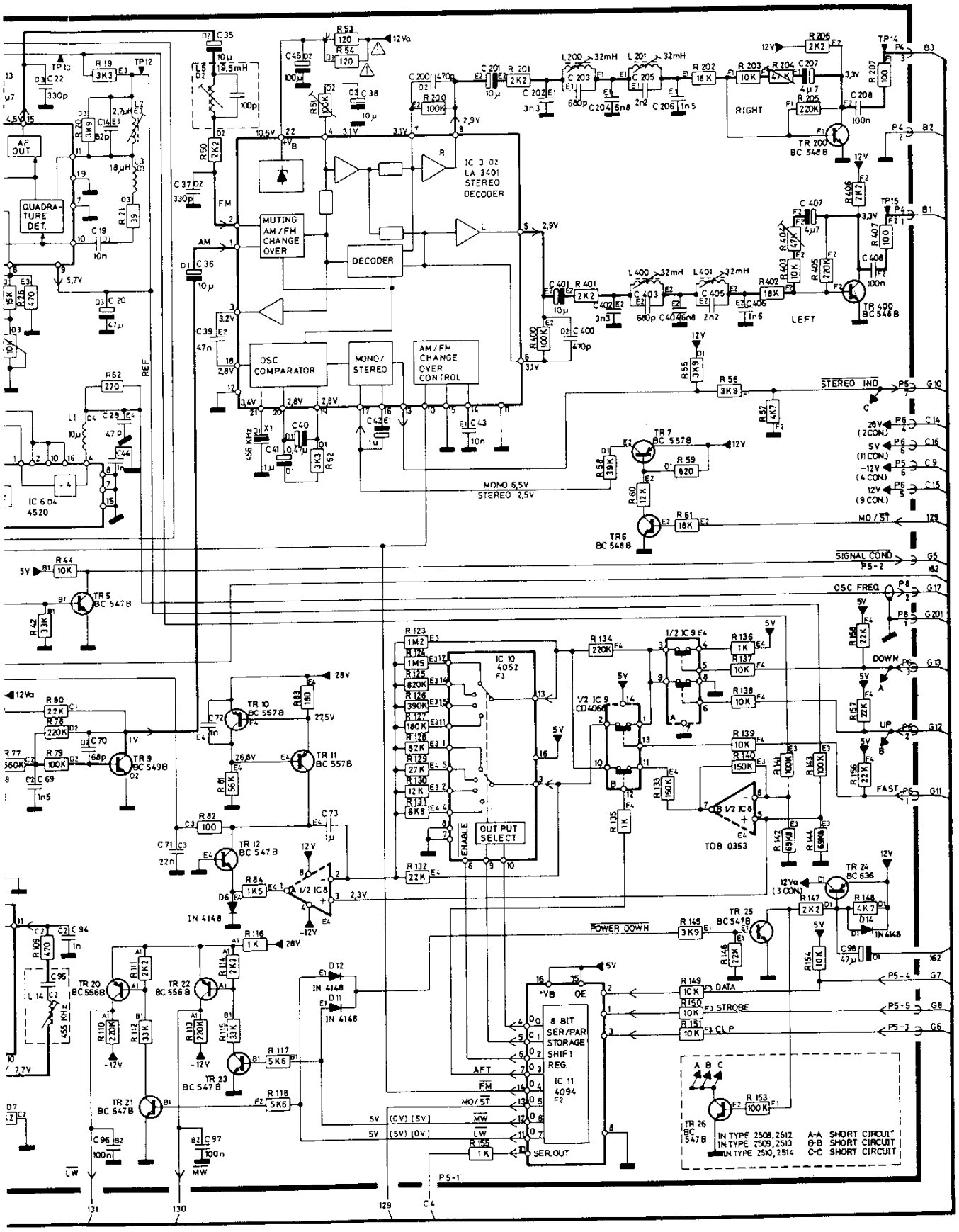

DIAGRAM B (Mic. Ampl., Input Select, Tone and Volume Control)

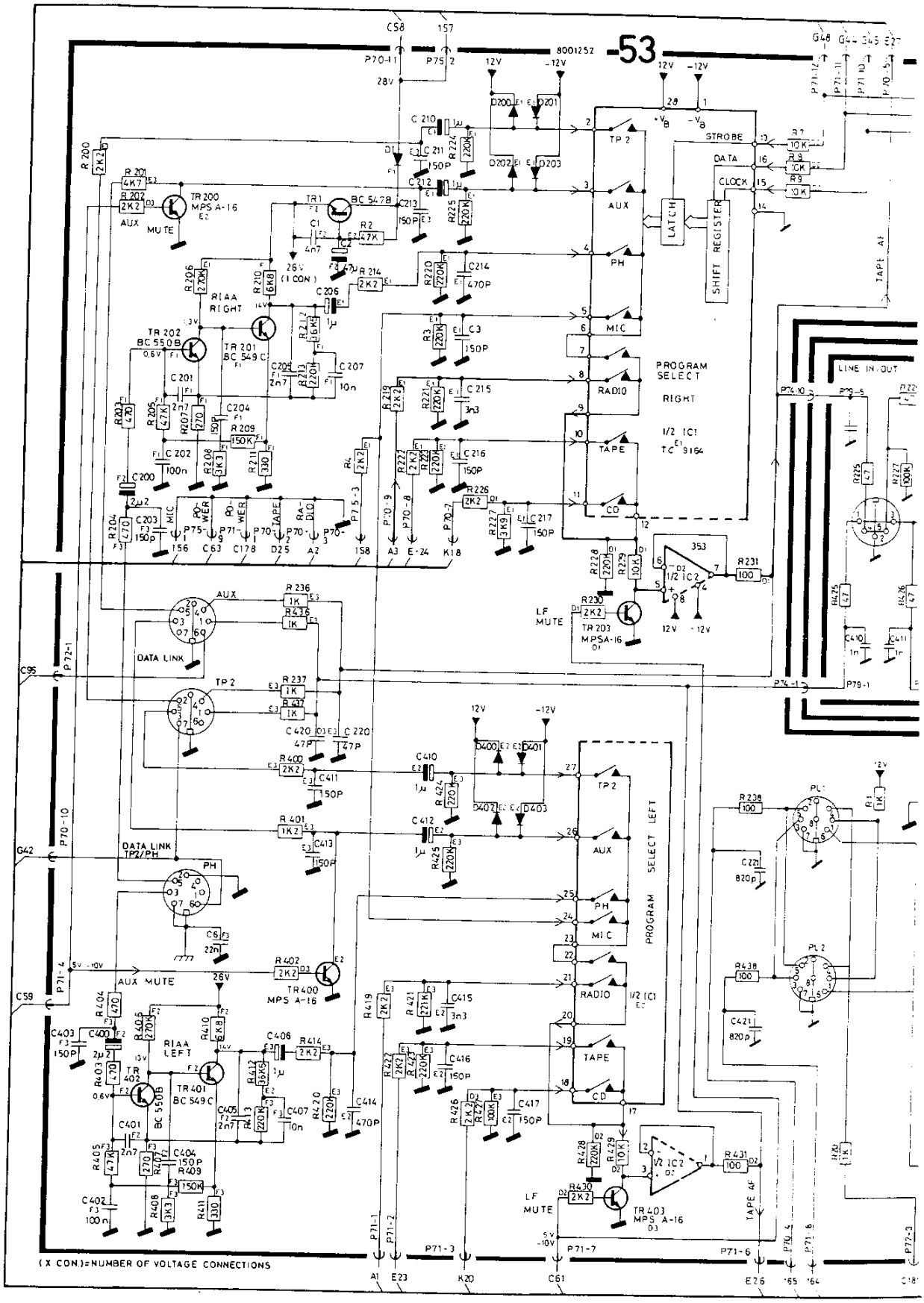

elect, Tone and Volume Control)

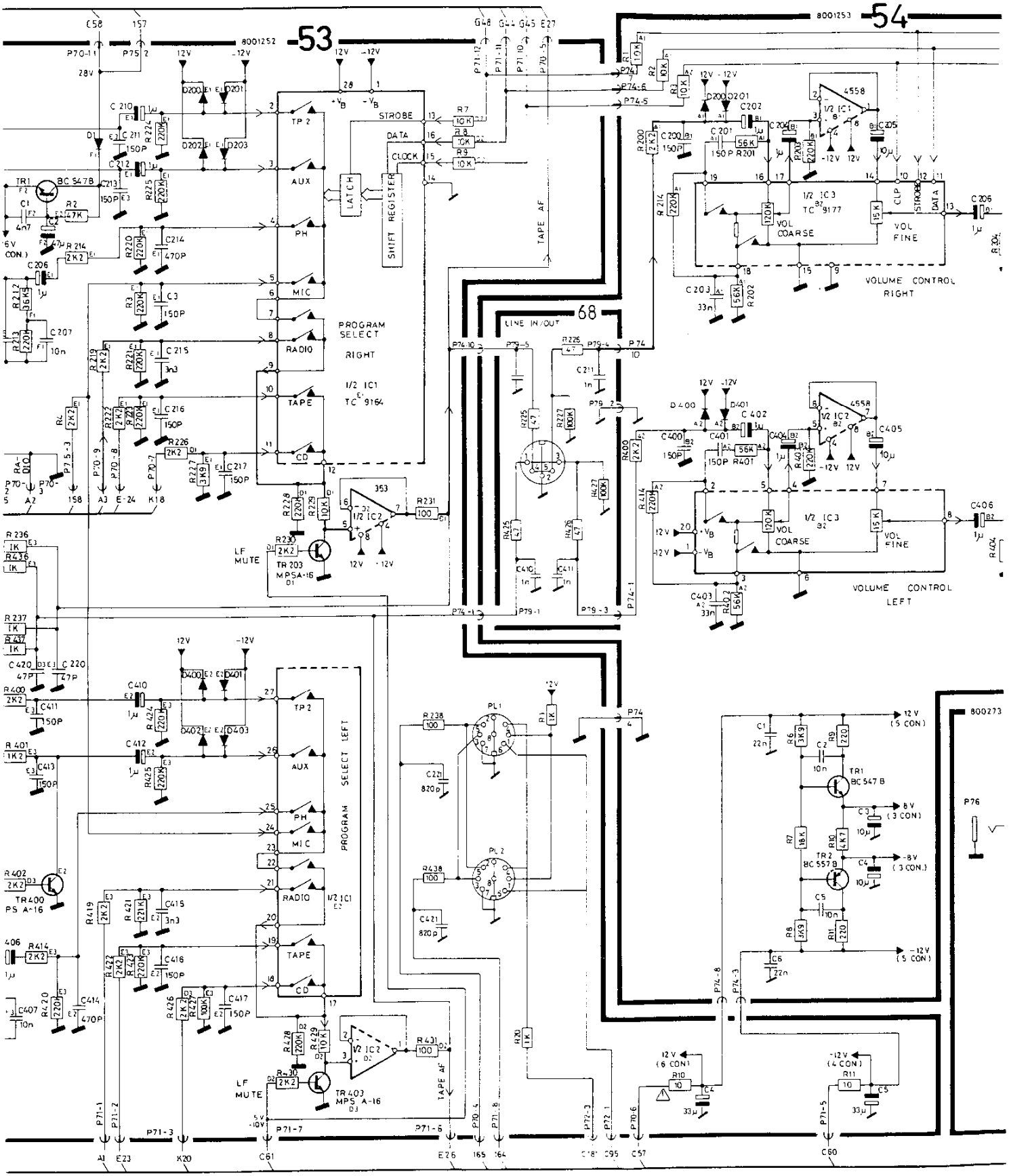

FOR SERVICE MANUALS
CONTACT:
MAURITRON TECHNICAL SERVICES
www.mauritron.co.uk
TEL: 01844 - 351694
FAX: 01844 - 352554

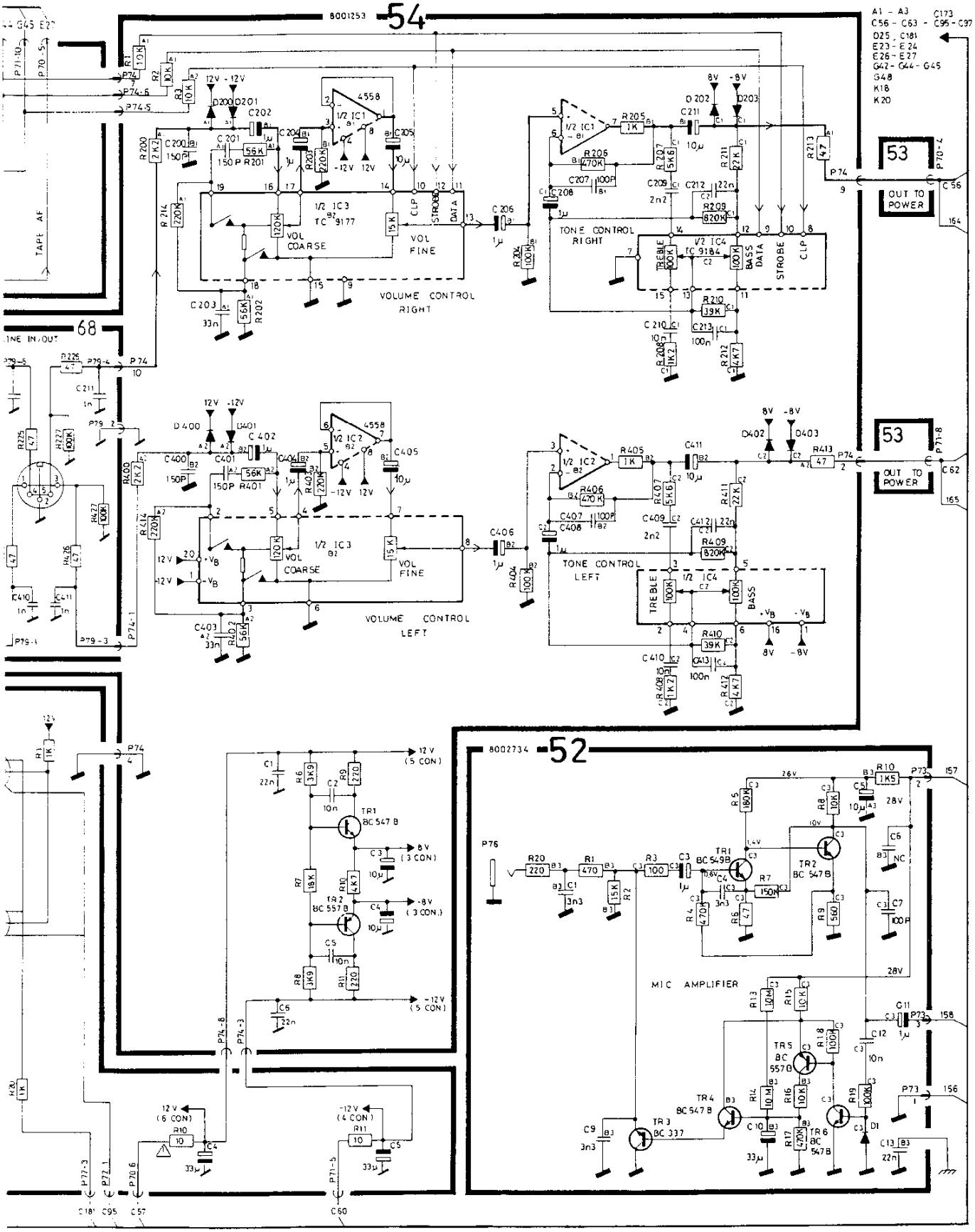

DIAGRAM C (Power Supply and Output Ampl. for 16 bit CD version)

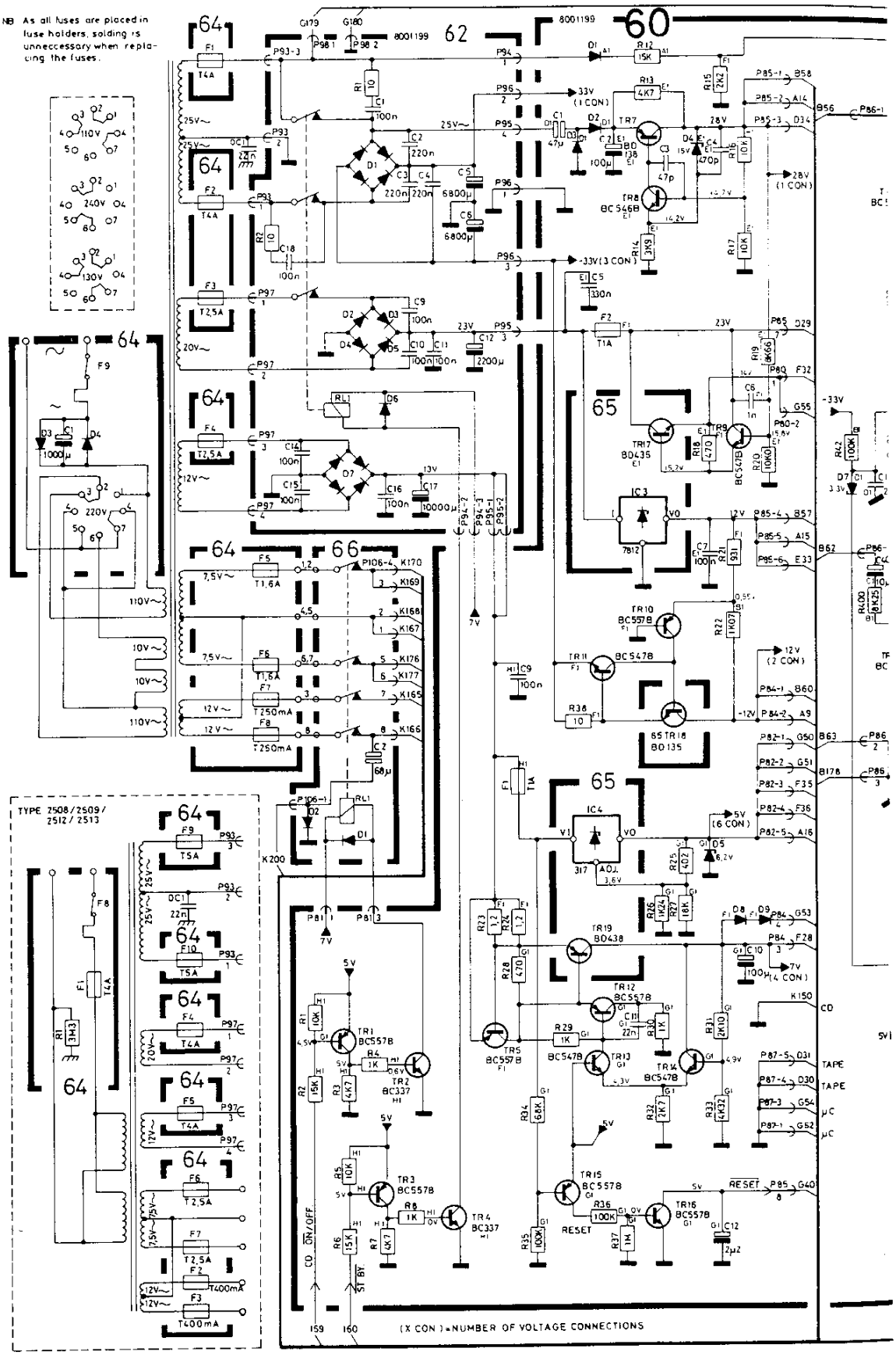

ıpply and Output Ampl. for 16 bit CD version)

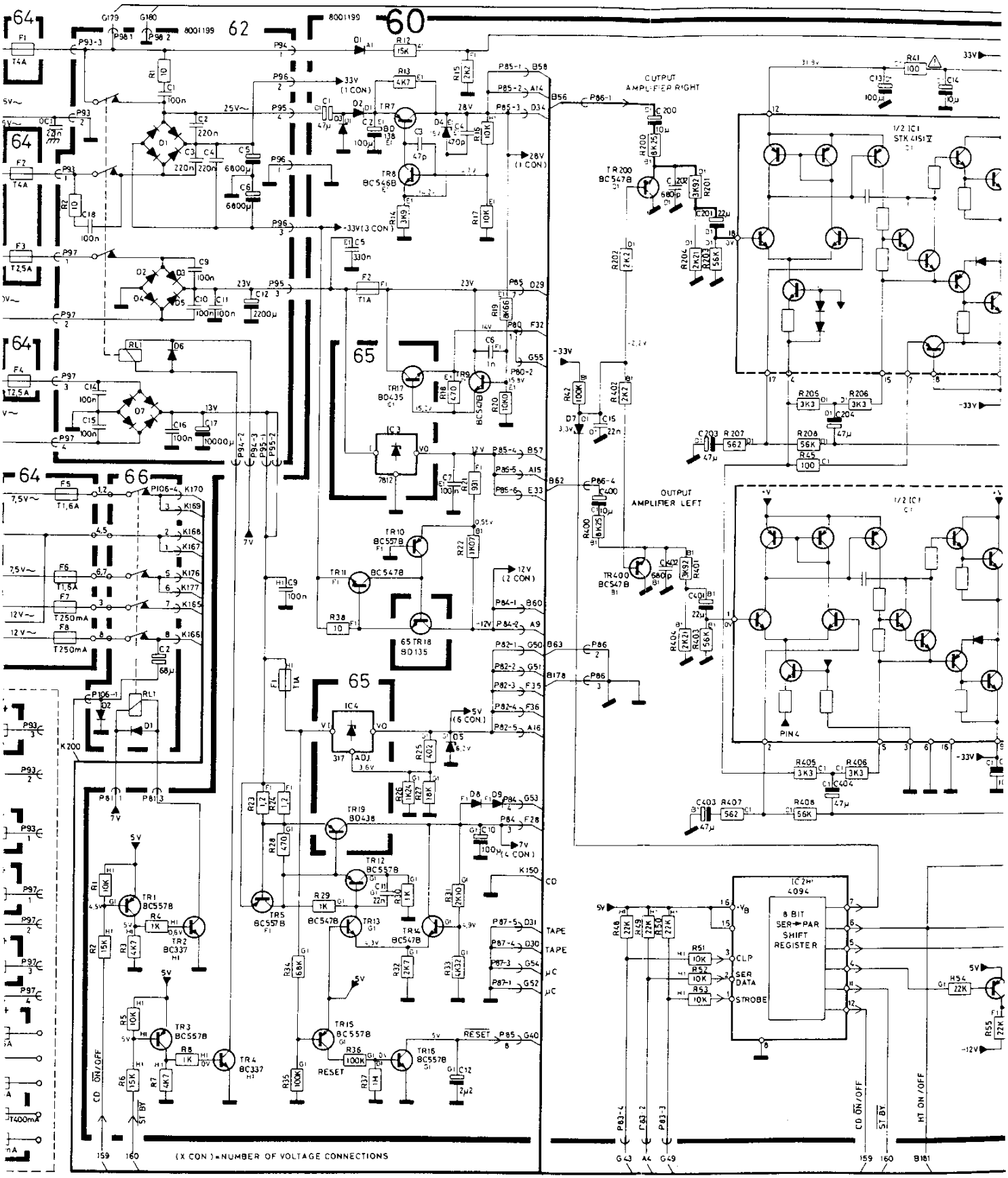

FOR SERVICE MANUALS
CONTACT:
MAURITRON TECHNICAL SERVICES
www.mauritron.co.uk
TEL: 01844 - 351694
FAX: 01844 - 352554

Bang & Olufsen

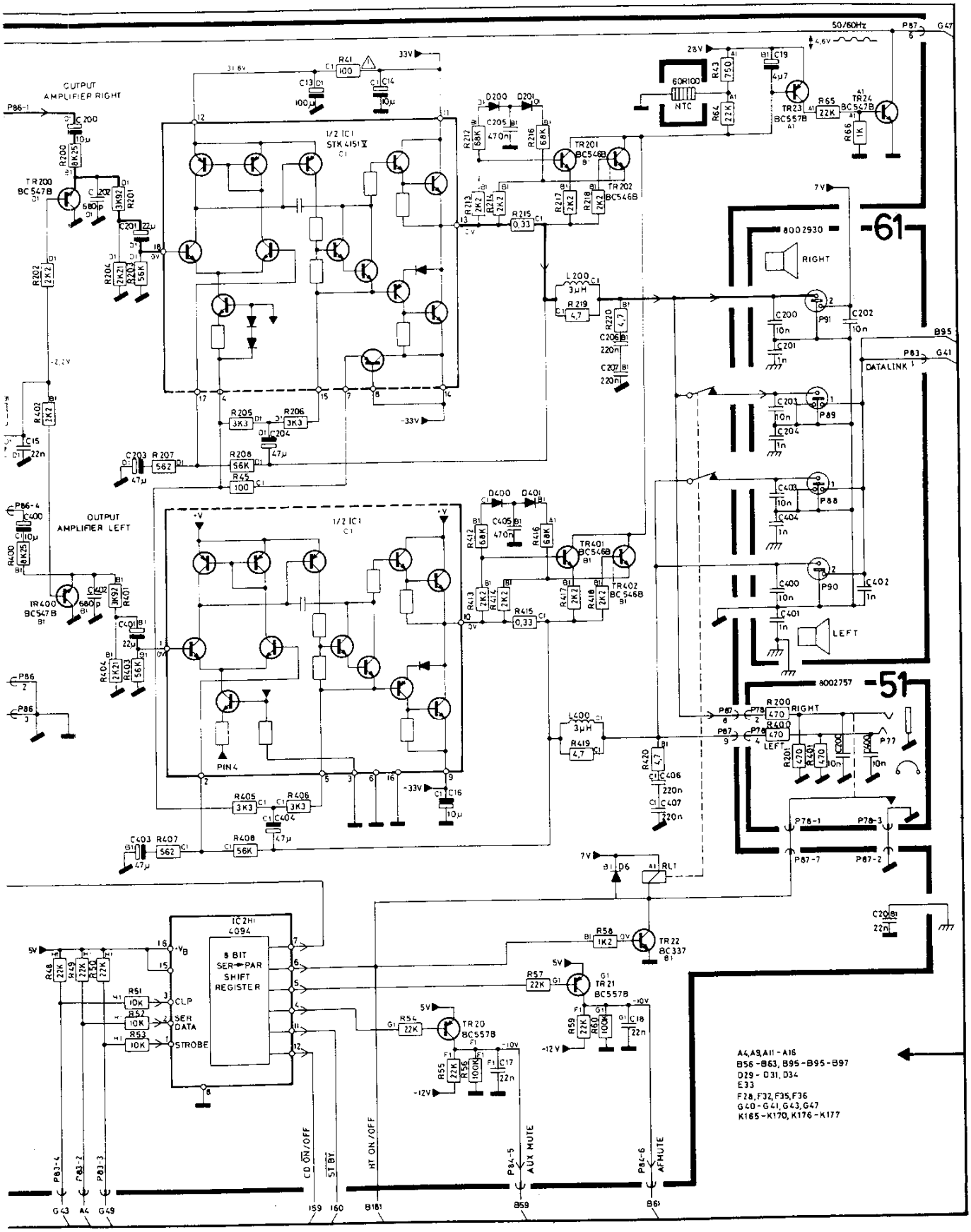

DIAGRAM D (Play Back Ampl., Rec. Ampl., Bias Osc. and HX Pro.)

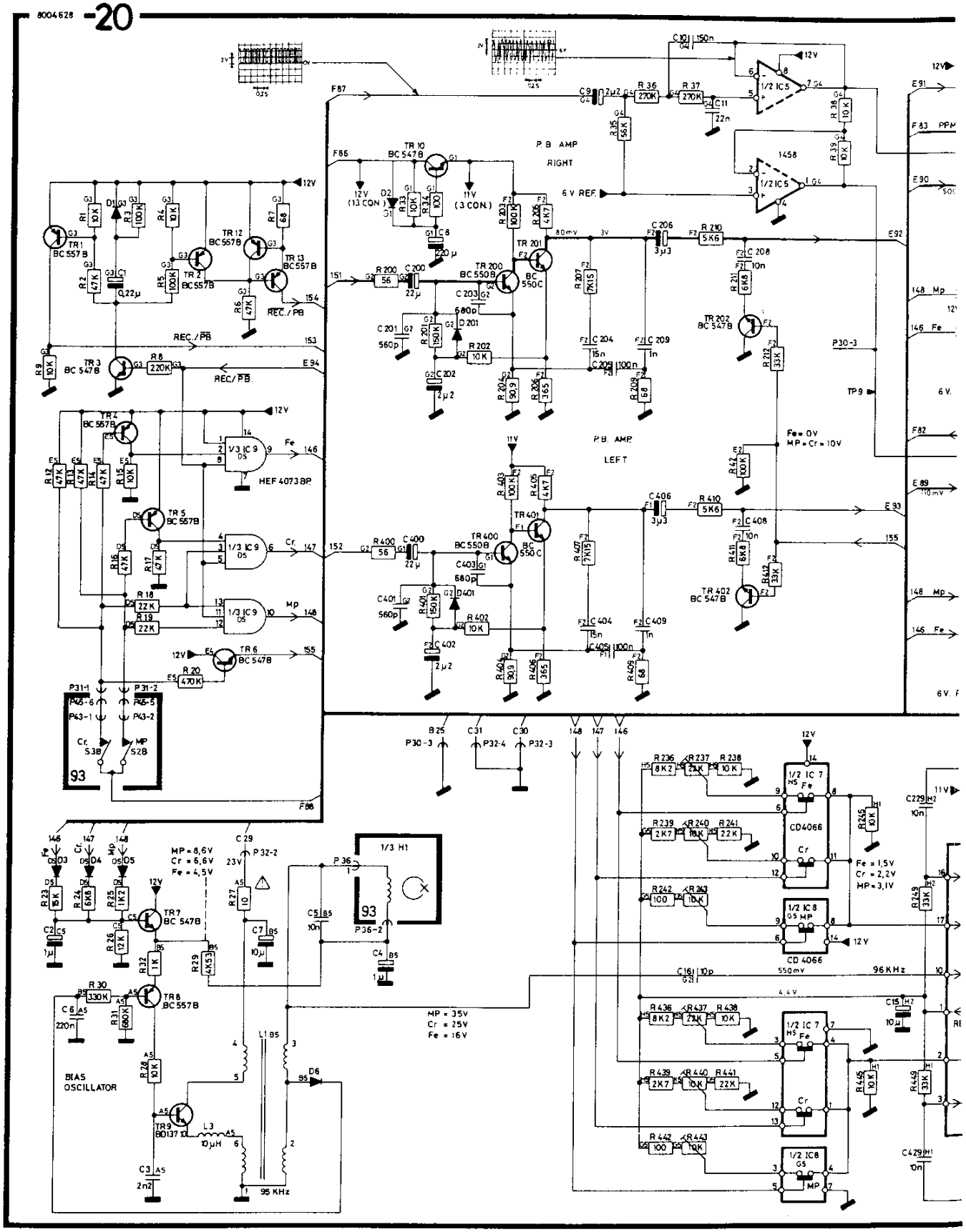

(X CON.) = NUMBER OF VOLTAGE CONNECTIONS

., Rec. Ampl., Bias Osc. and HX Pro.)

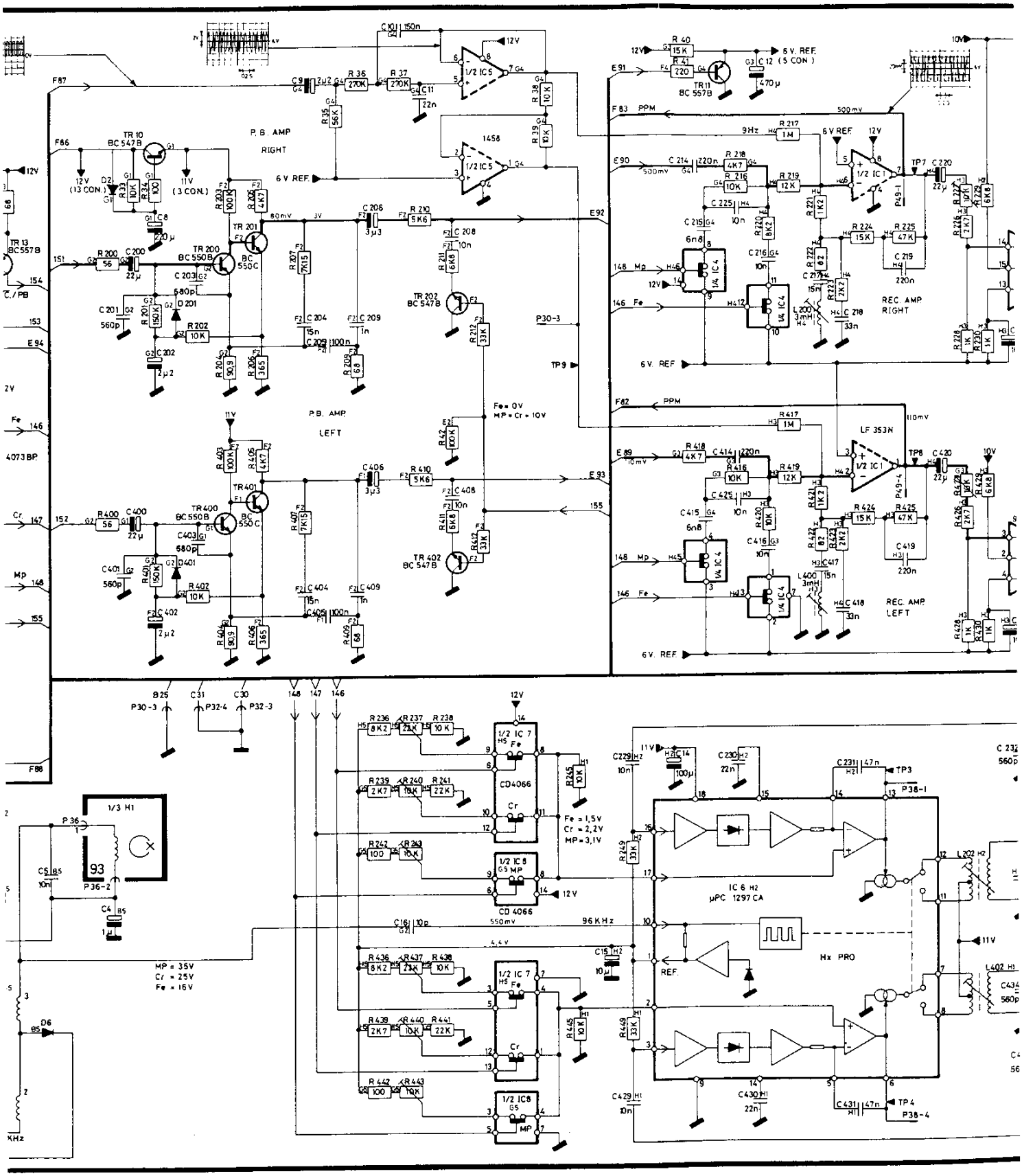

FOR SERVICE MANUALS
CONTACT:
MAURITRON TECHNICAL SERVICES
www.mauritron.co.uk
TEL: 01844 - 351694
FAX: 01844 - 352554

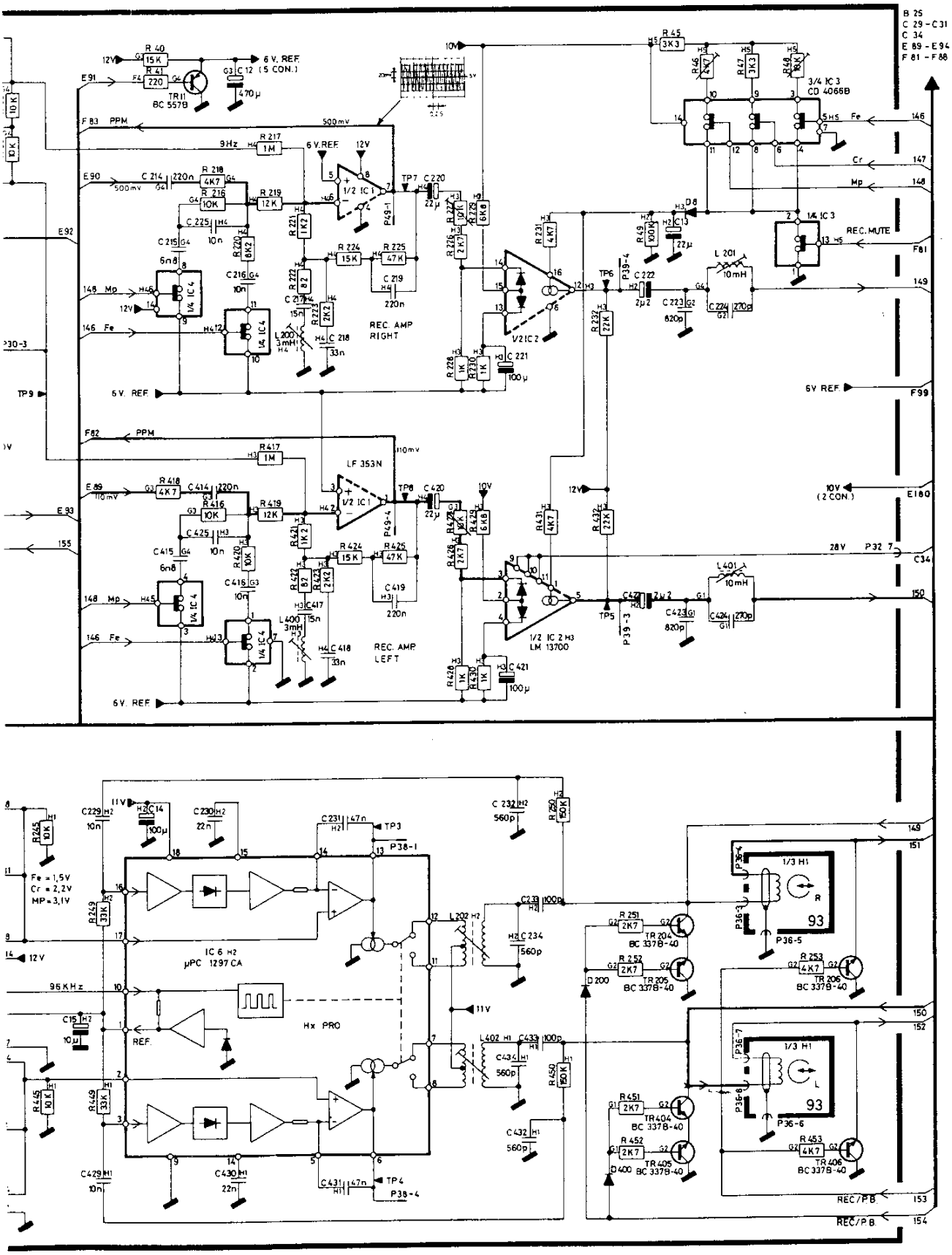

2-7

DIAGRAM E (Dolby NR and Rec. Level Adjustment)

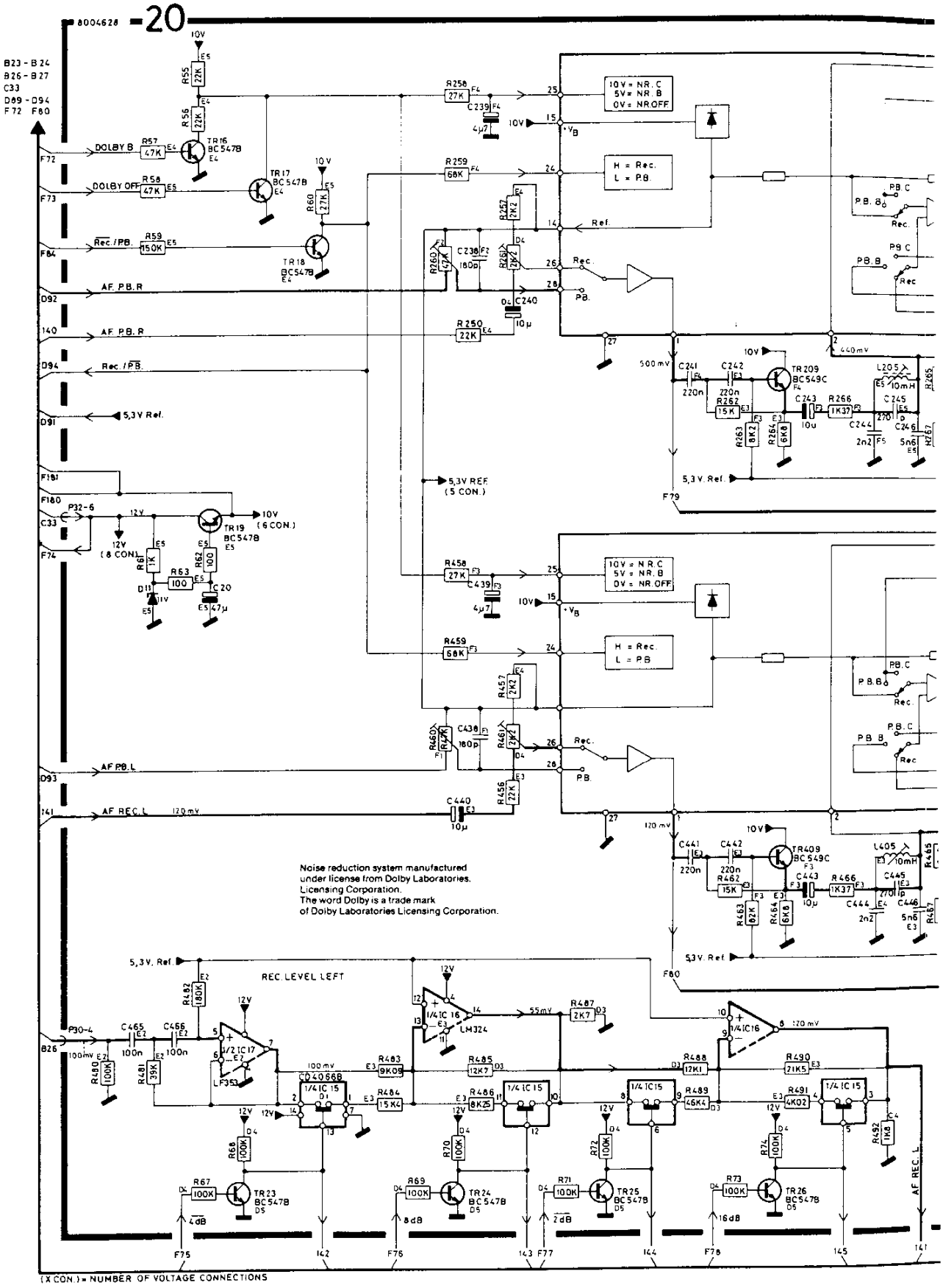

Rec. Level Adjustment)

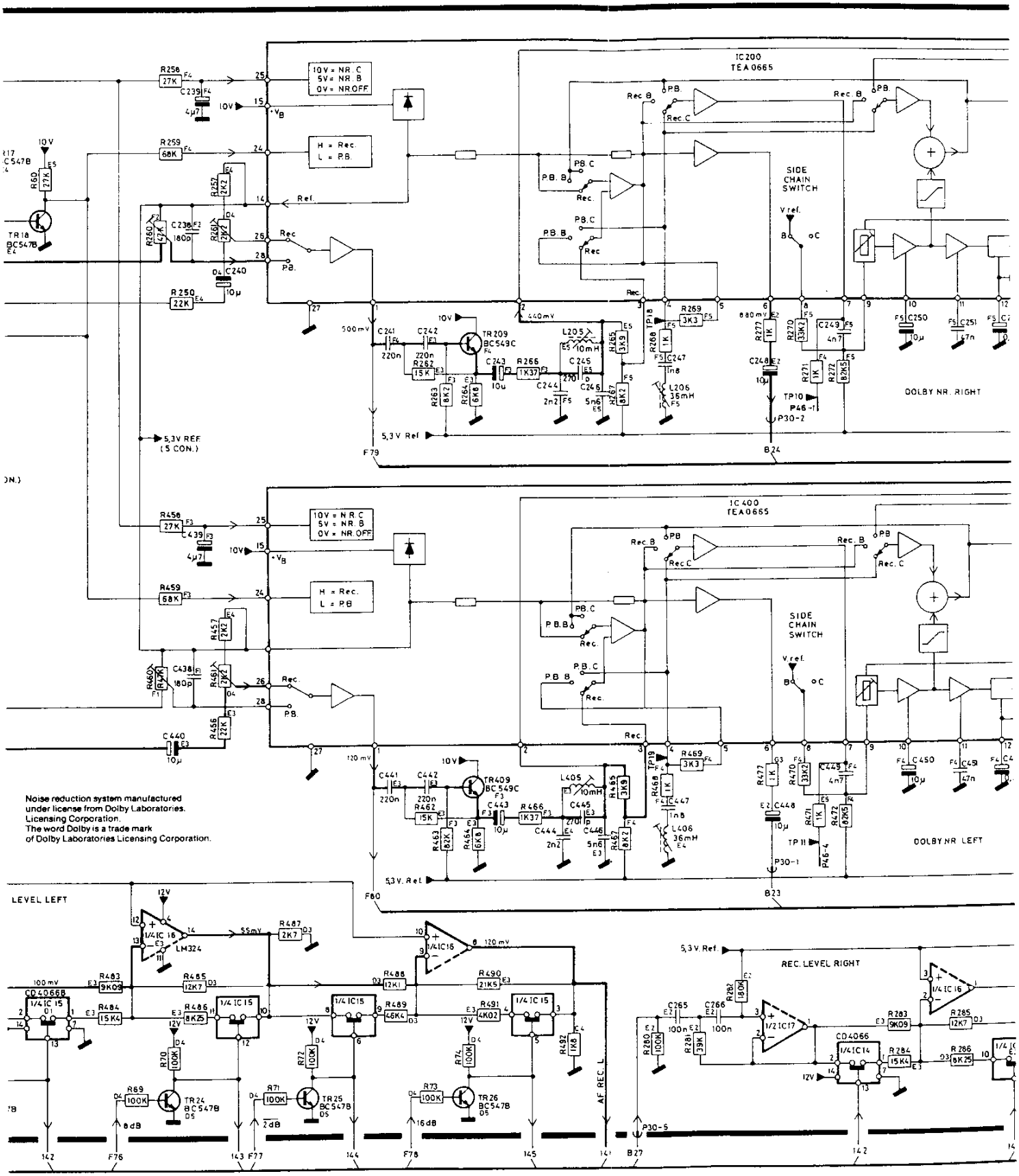

FOR SERVICE MANUALS
CONTACT:
MAURITRON TECHNICAL SERVICES
www.mauritron.co.uk
TEL: 01844 - 351694
FAX: 01844 - 352554

Bang & Olufsen

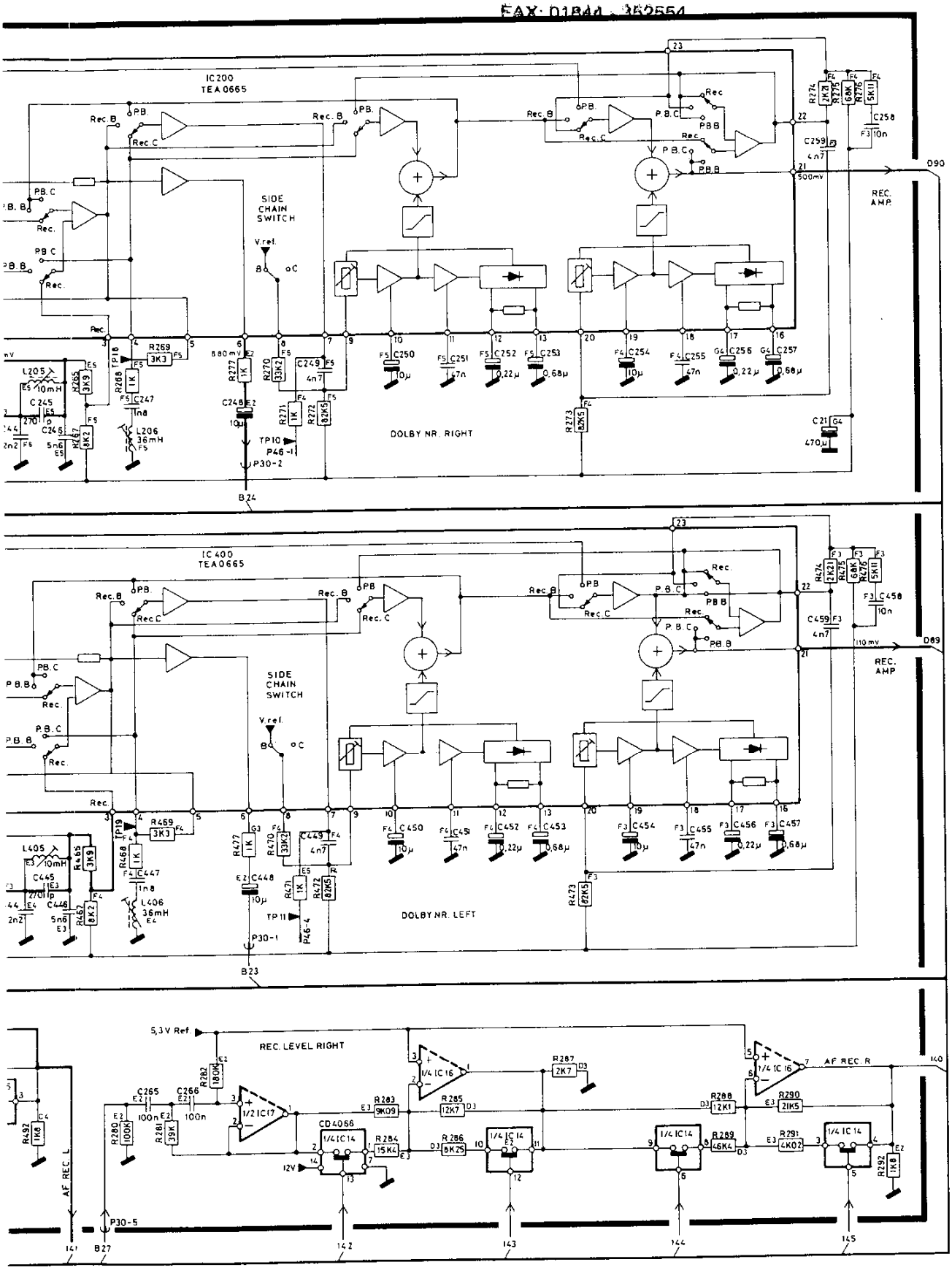

Bang & Olufsen

FOR SERVICE MANUALS
CONTACT:
MAURITRON TECHNICAL SERVICES
www.mauritron.co.uk
TEL: 01844 - 351694
FAX: 01844 - 352554

DIAGRAM F (Control for Tape Section)

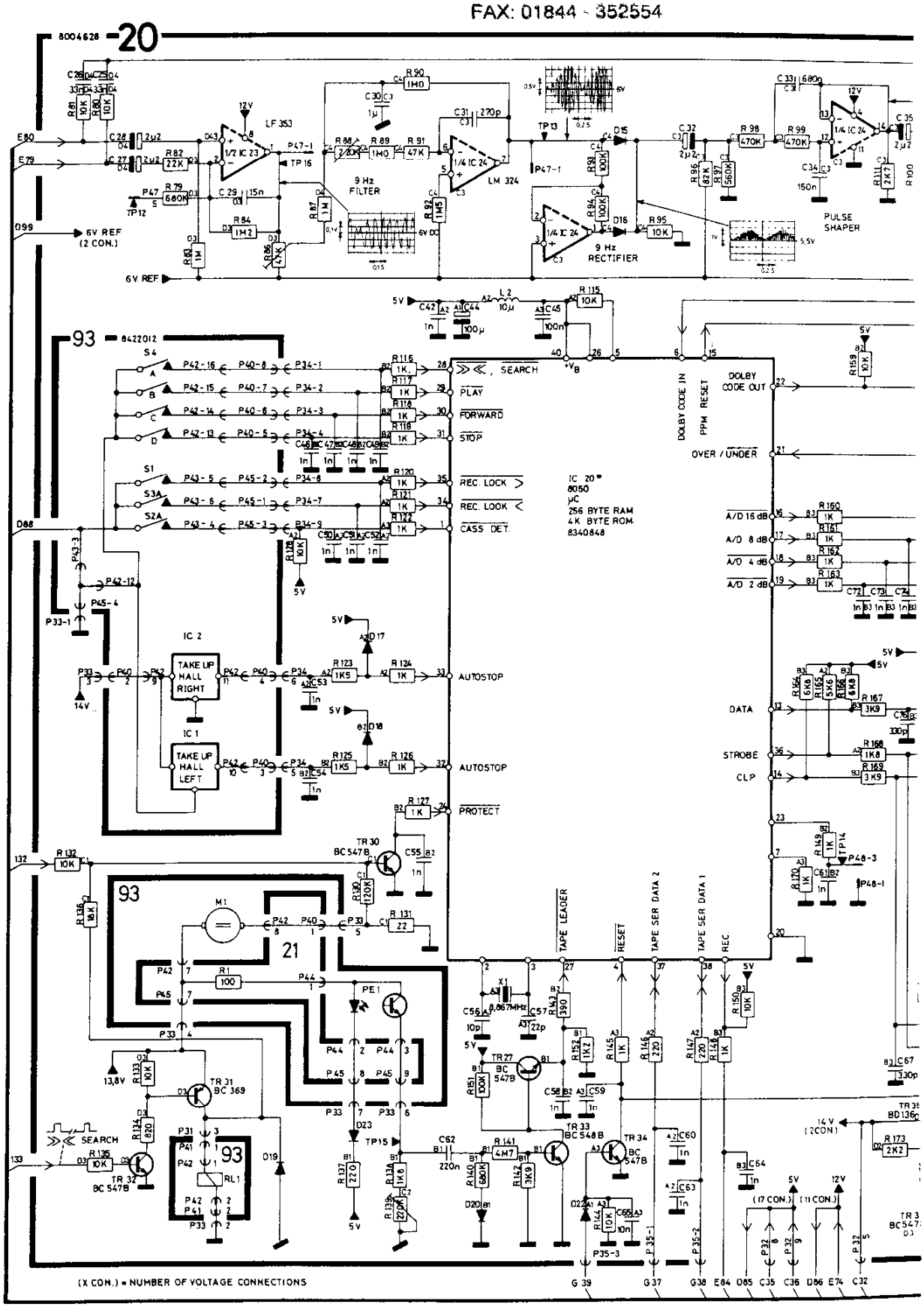

e Section)

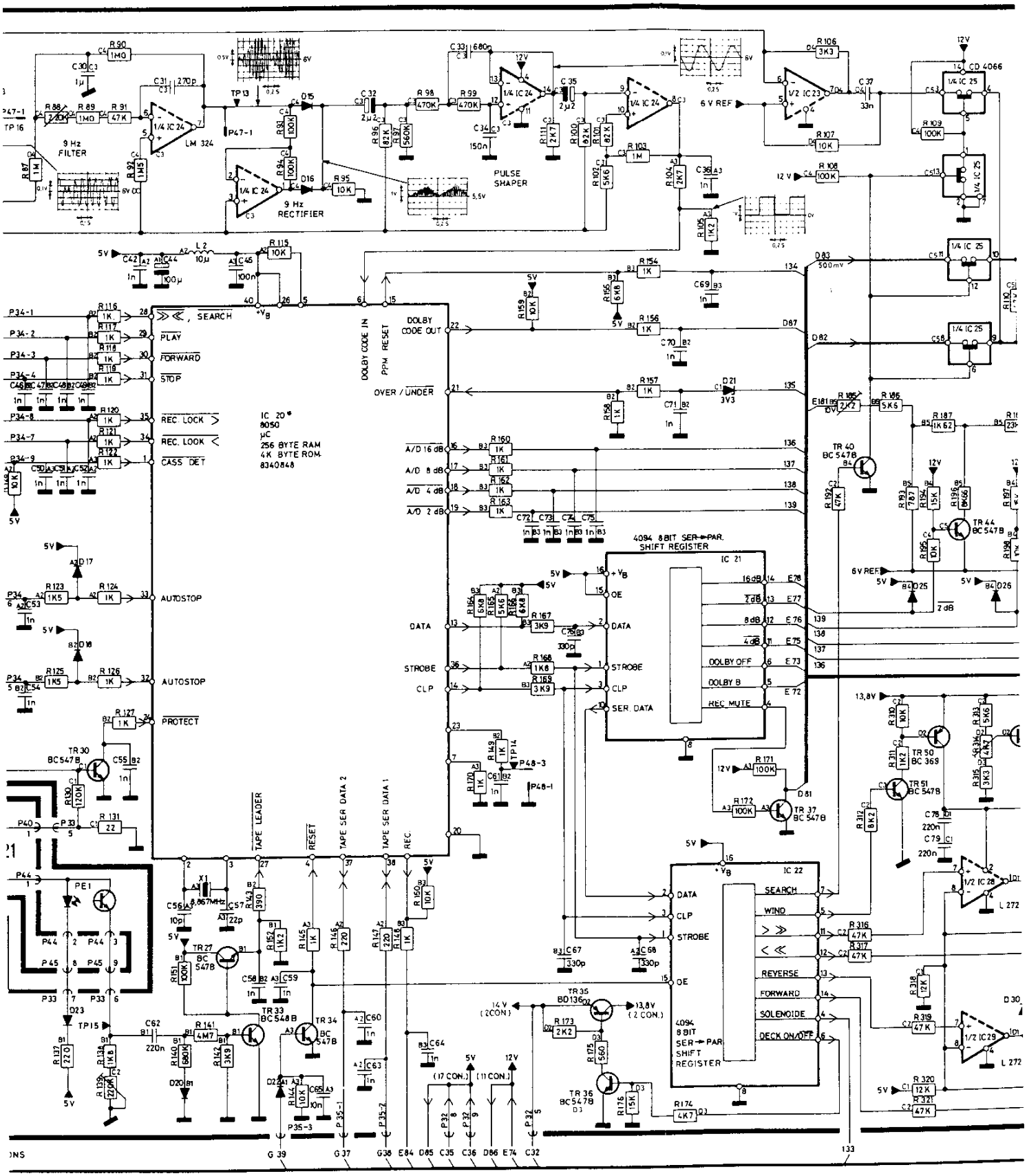
9 Hz FILTER
LM 324
9 Hz RECTIFIER
PULSE SHAPER
6 V REF
CD 4066
SEARCH
PLAY
FORWARD
STOP
REC. LOCK
REC. LOOK
CASS. DET
AUTOSTOP
PROTECT
DOLBY CODE IN
PPM RESET
DOLBY CODE OUT
OVER / UNDER
A/D 16 dB
A/D 8 dB
A/D 4 dB
A/D 2 dB
IC 20*
8050
µC
256 BYTE RAM
4K BYTE ROM
8340848
4094 8BIT SER→PAR. SHIFT REGISTER
IC 21
DATA
STROBE
CLP
SER. DATA
DOLBY OFF
DOLBY B
REC. MUTE
TAPE LEADER
RESET
TAPE SER DATA 2
TAPE SER DATA 1
REC.
IC 22
SEARCH
WIND
REVERSE
FORWARD
SOLENOIDE
DECK ON/OFF
4094 8 BIT SER→PAR SHIFT REGISTER

FOR SERVICE MANUALS
CONTACT:
MAURITRON TECHNICAL SERVICES
www.mauritron.co.uk
TEL: 01844 - 351694
FAX: 01844 - 352554

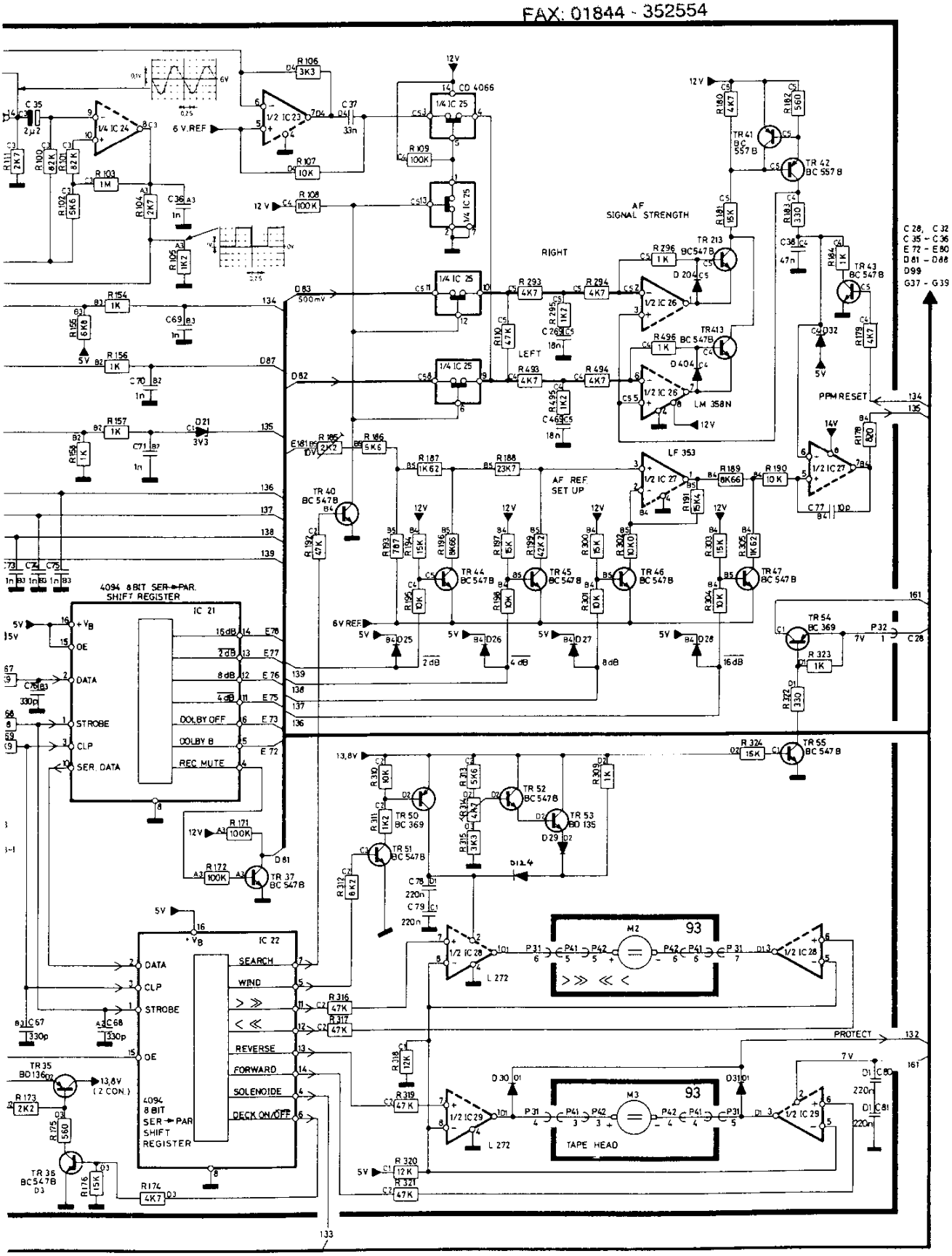

FOR SERVICE MANUALS
CONTACT:
MAURITRON TECHNICAL SERVICES
www.mauritron.co.uk
TEL: 01844 - 351694
FAX: 01844 - 352554

2-9

DIAGRAM G (System Control and IR Transceiver)

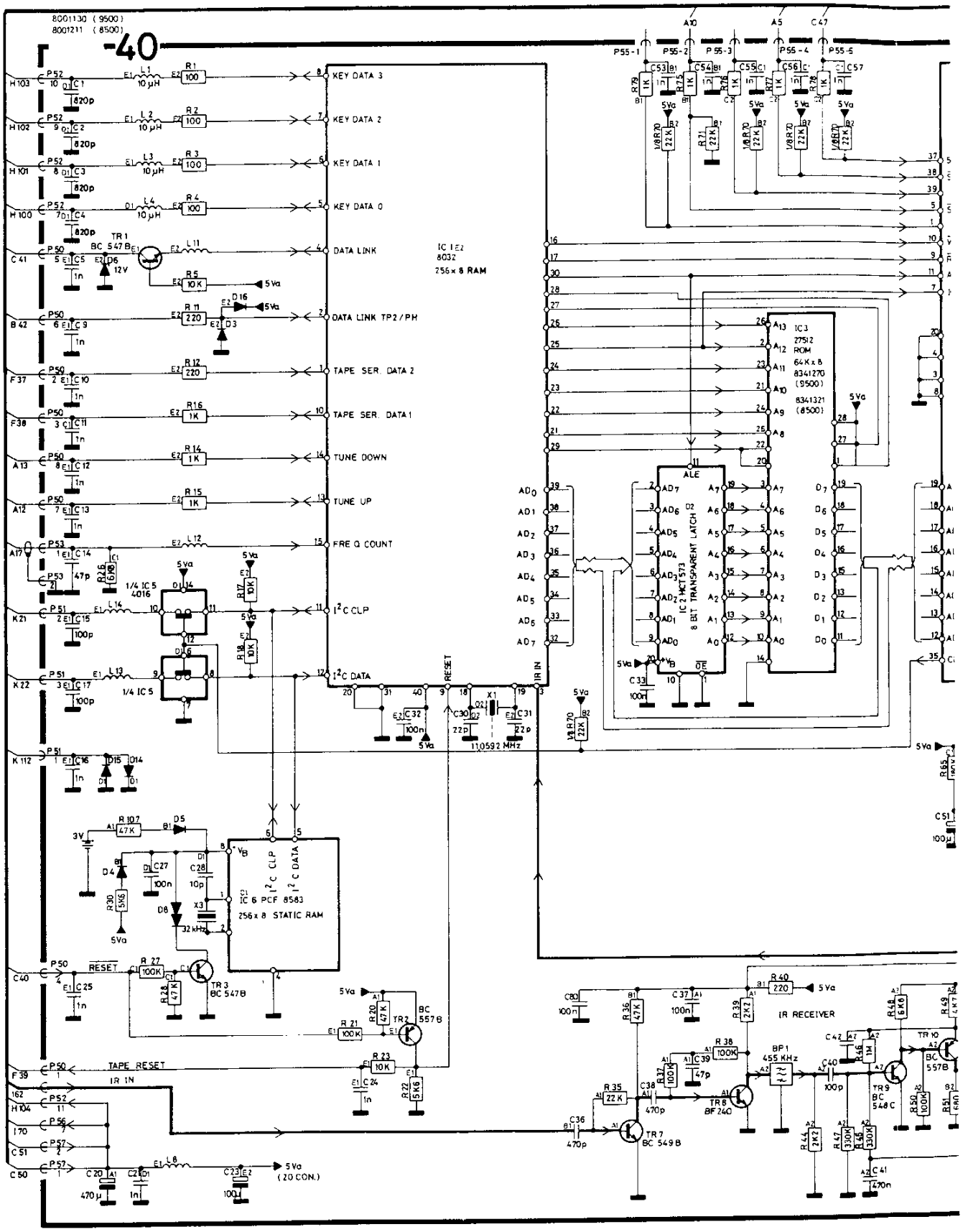

eiver)

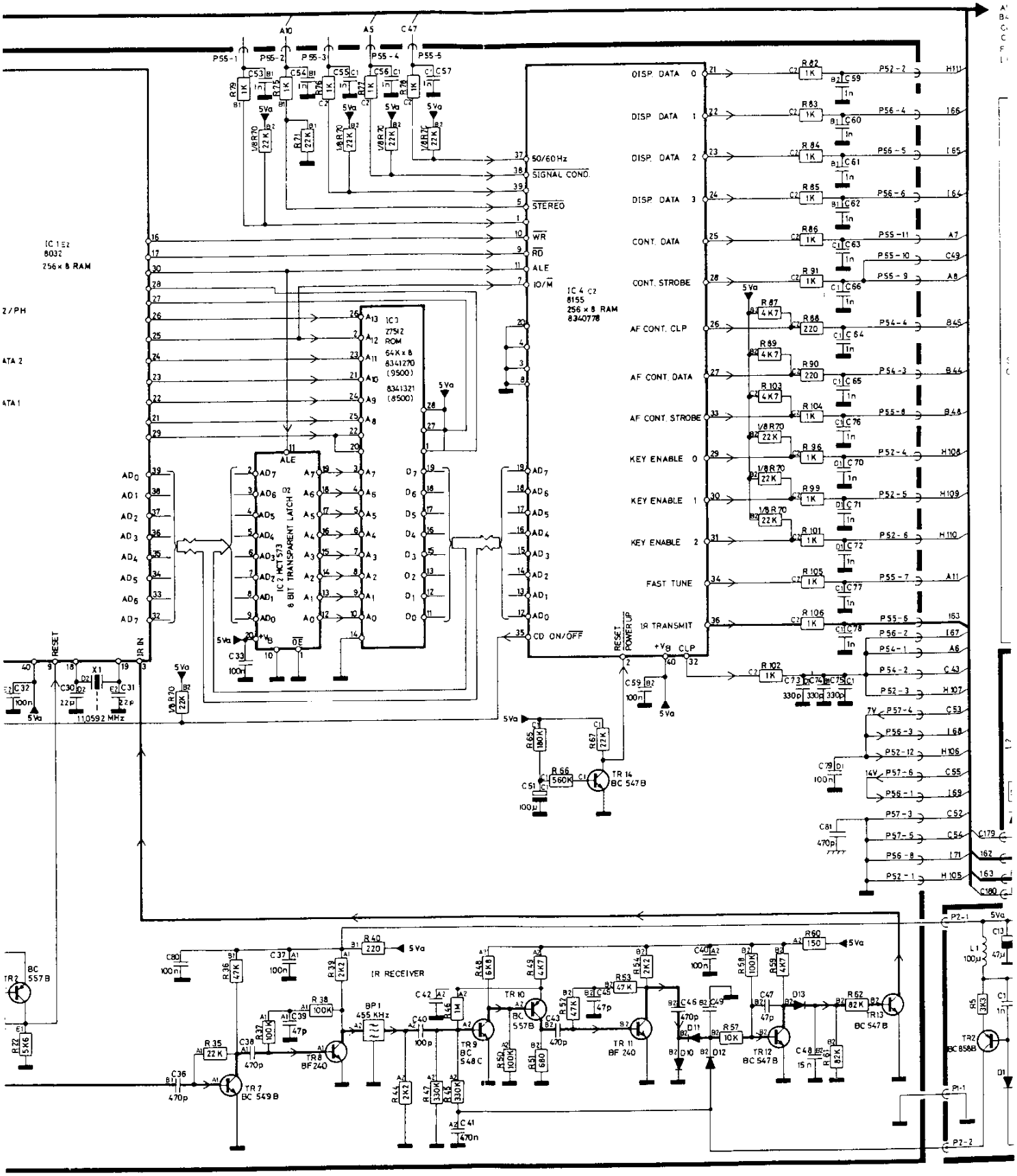
IC 1 E2
8032
256 x 8 RAM
IC 3
27512
ROM
64 K x 8
8341270
(9500)
8341321
(8500)
IC 2 HCT 573
8 BIT TRANSPARENT LATCH
IC 4 C2
8155
256 x 8 RAM
8340778
DISP. DATA 0
DISP. DATA 1
DISP. DATA 2
DISP. DATA 3
CONT. DATA
CONT. STROBE
AF CONT. CLP
AF CONT. DATA
AF CONT. STROBE
KEY ENABLE 0
KEY ENABLE 1
KEY ENABLE 2
FAST TUNE
IR TRANSMIT
50/60 Hz
SIGNAL COND.
STEREO
WR
RD
ALE
IO/M
CD ON/OFF
RESET
POWER UP
CLP
IR IN
X1
11,0592 MHz
IR RECEIVER
BP1
455 KHz
TR 7
BC 549 B
TR 8
BF 240
TR 9
BC 548 C
TR 10
BC 557 B
TR 11
BF 240
TR 12
BC 547 B
TR 13
BC 547 B
TR 14
BC 547 B
TR 2
BC 557 B
TR 2
BC 858 B

FOR SERVICE MANUALS
CONTACT:
MAURITRON TECHNICAL SERVICES
www.mauritron.co.uk
TEL: 01844 - 351694
FAX: 01844 - 352554

Bang & Olufsen

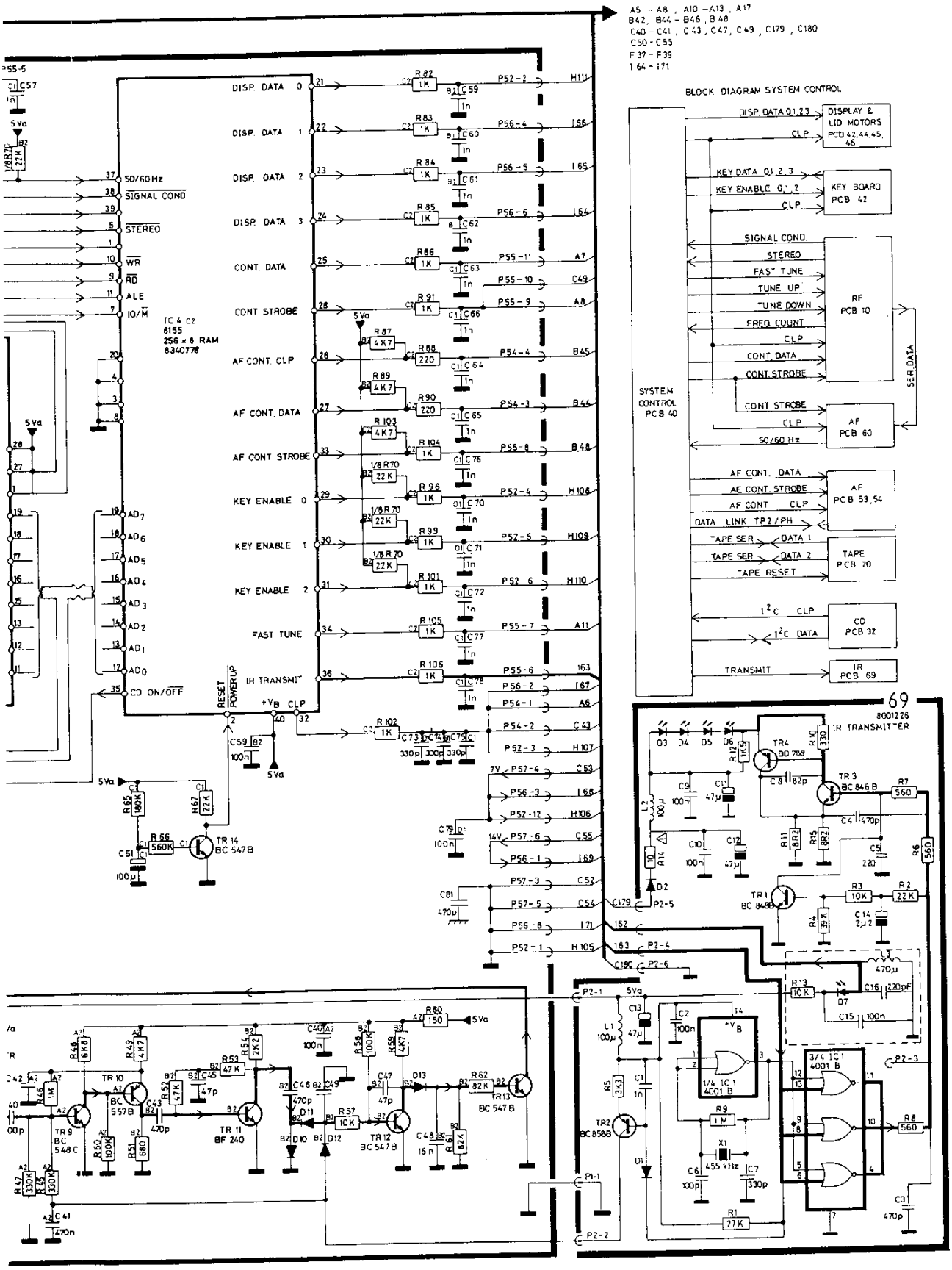

FOR SERVICE MANUALS
CONTACT:
MAURITRON TECHNICAL SERVICES
www.mauritron.co.uk
TEL: 01844 - 351694
FAX: 01844 - 352554

DIAGRAM H (Key Board and Lower Display)

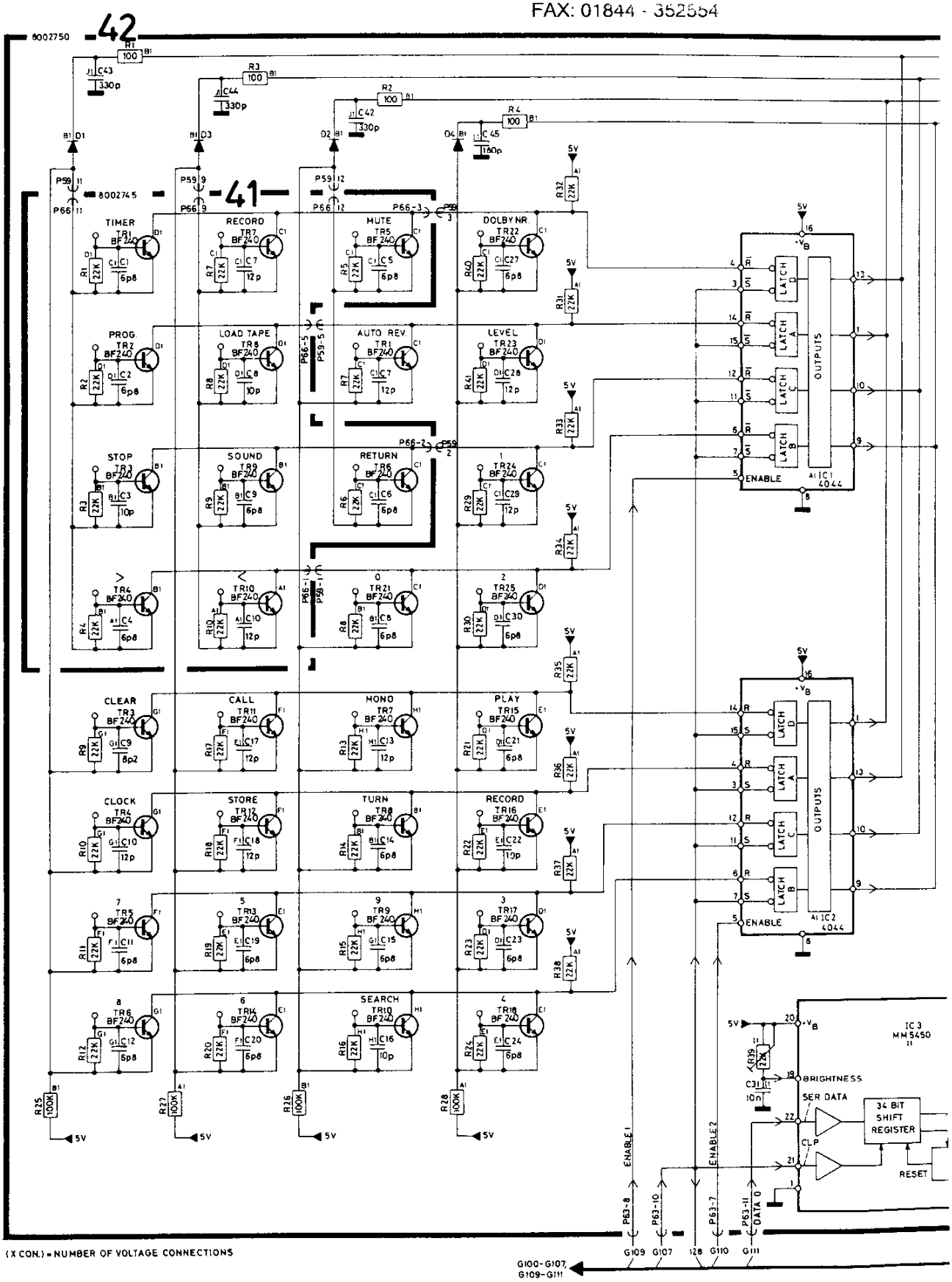

(X CON.) = NUMBER OF VOLTAGE CONNECTIONS

ower Display)

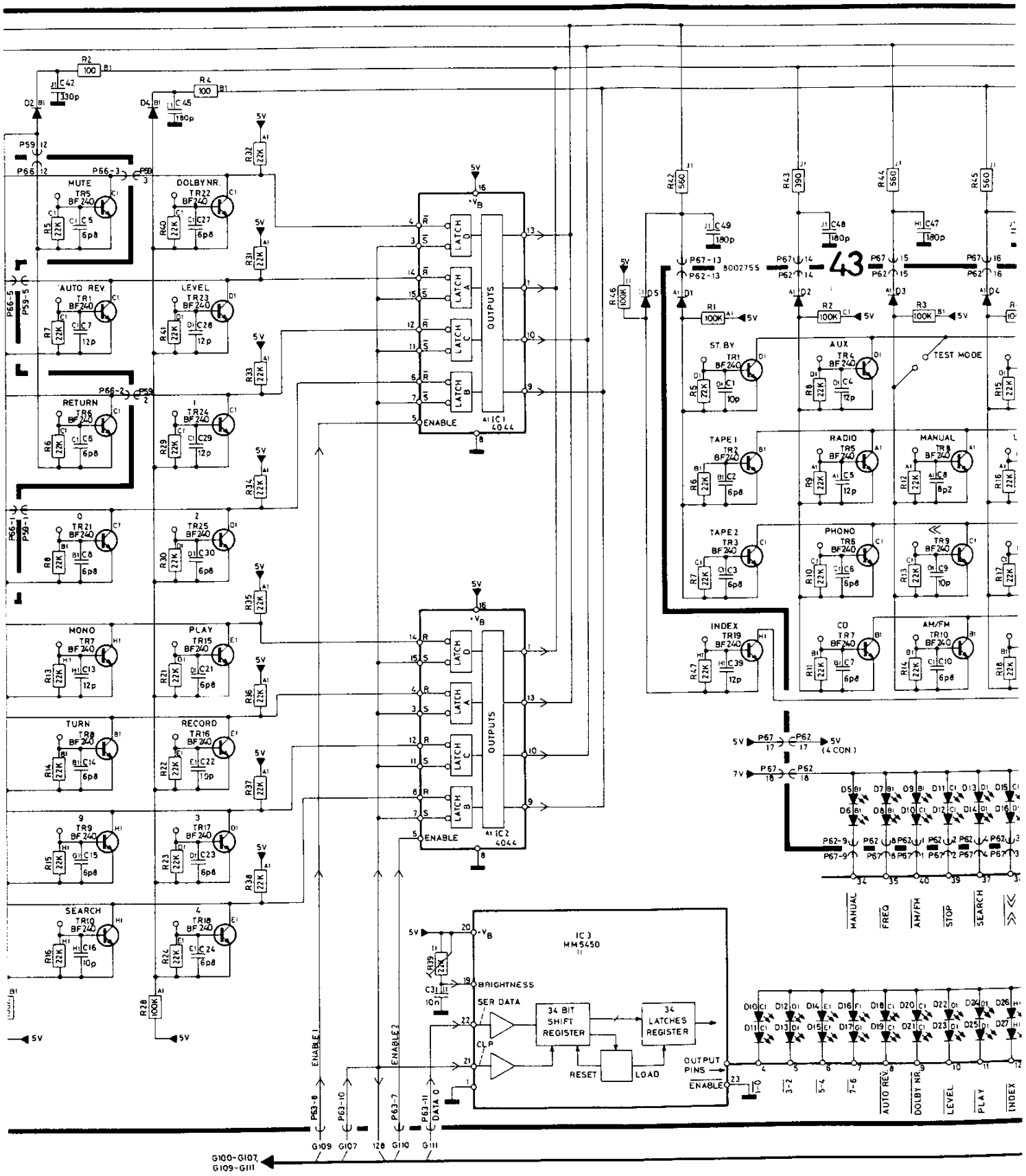

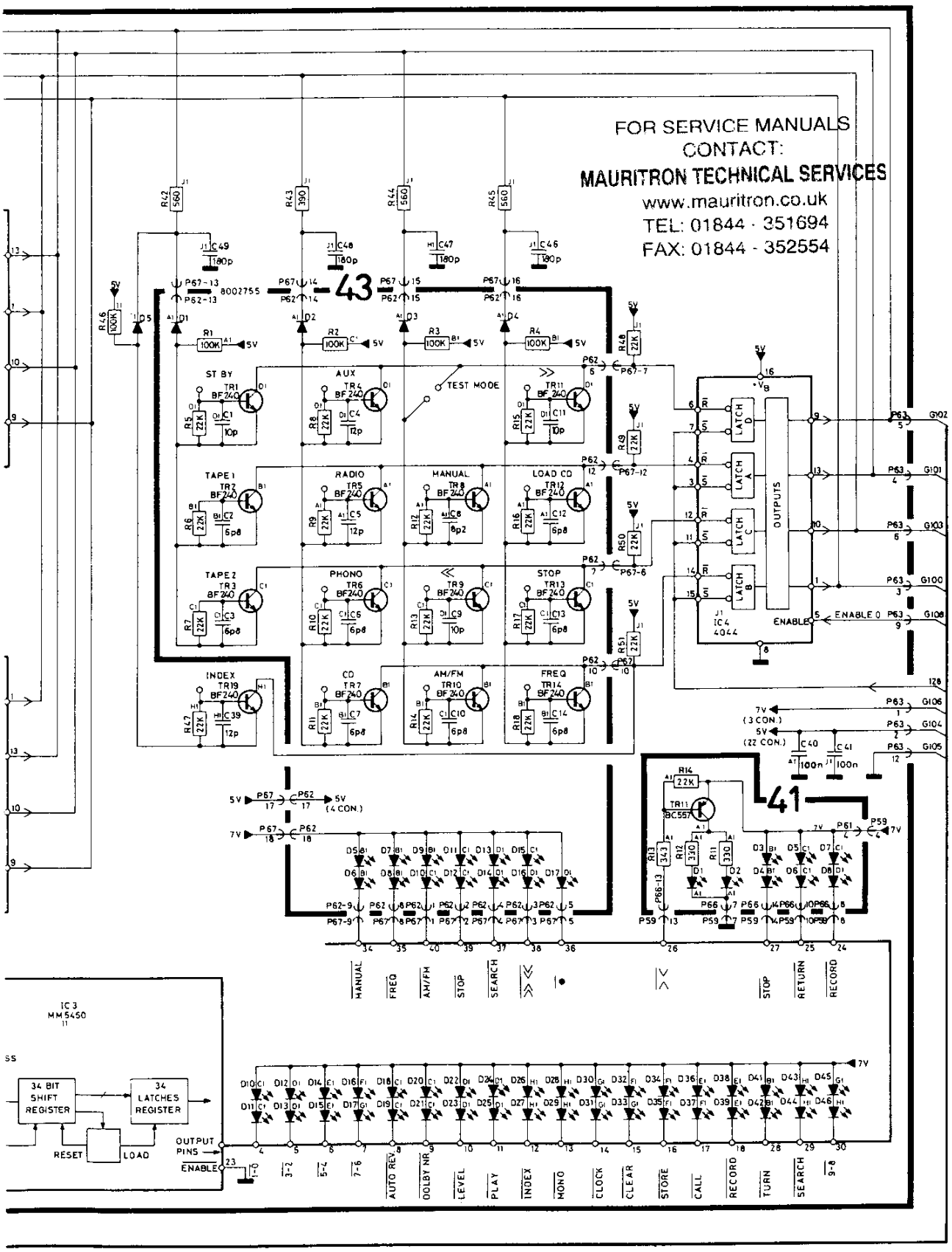
FOR SERVICE MANUALS
CONTACT:
MAURITRON TECHNICAL SERVICES
www.mauritron.co.uk
TEL: 01844 - 351694
FAX: 01844 - 352554
43
41
ST BY
AUX
TEST MODE
TAPE 1
RADIO
MANUAL
LOAD CD
TAPE 2
PHONO
STOP
INDEX
CD
AM/FM
FREQ
LATCH D
LATCH A
LATCH C
LATCH B
OUTPUTS
ENABLE
ENABLE 0
IC4
4044
IC 3
MM5450
34 BIT
SHIFT
REGISTER
34
LATCHES
REGISTER
RESET
LOAD
OUTPUT
PINS
ENABLE
AUTO REV
DOLBY NR
LEVEL
PLAY
INDEX
MONO
CLOCK
CLEAR
STORE
CALL
RECORD
TURN
SEARCH
MANUAL
FREQ
AM/FM
STOP
SEARCH
STOP
RETURN
RECORD

DIAGRAM I (Upper Display)

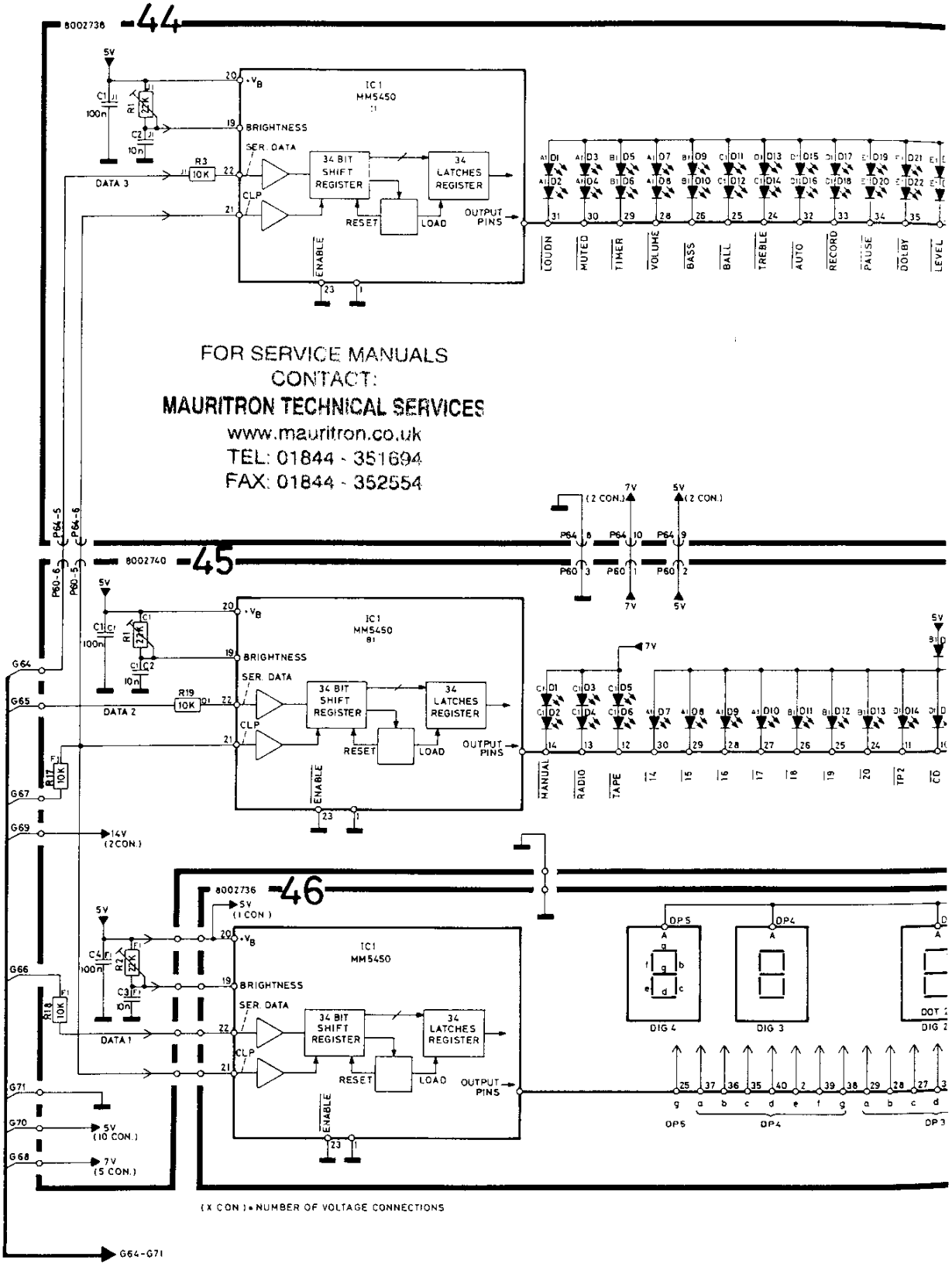

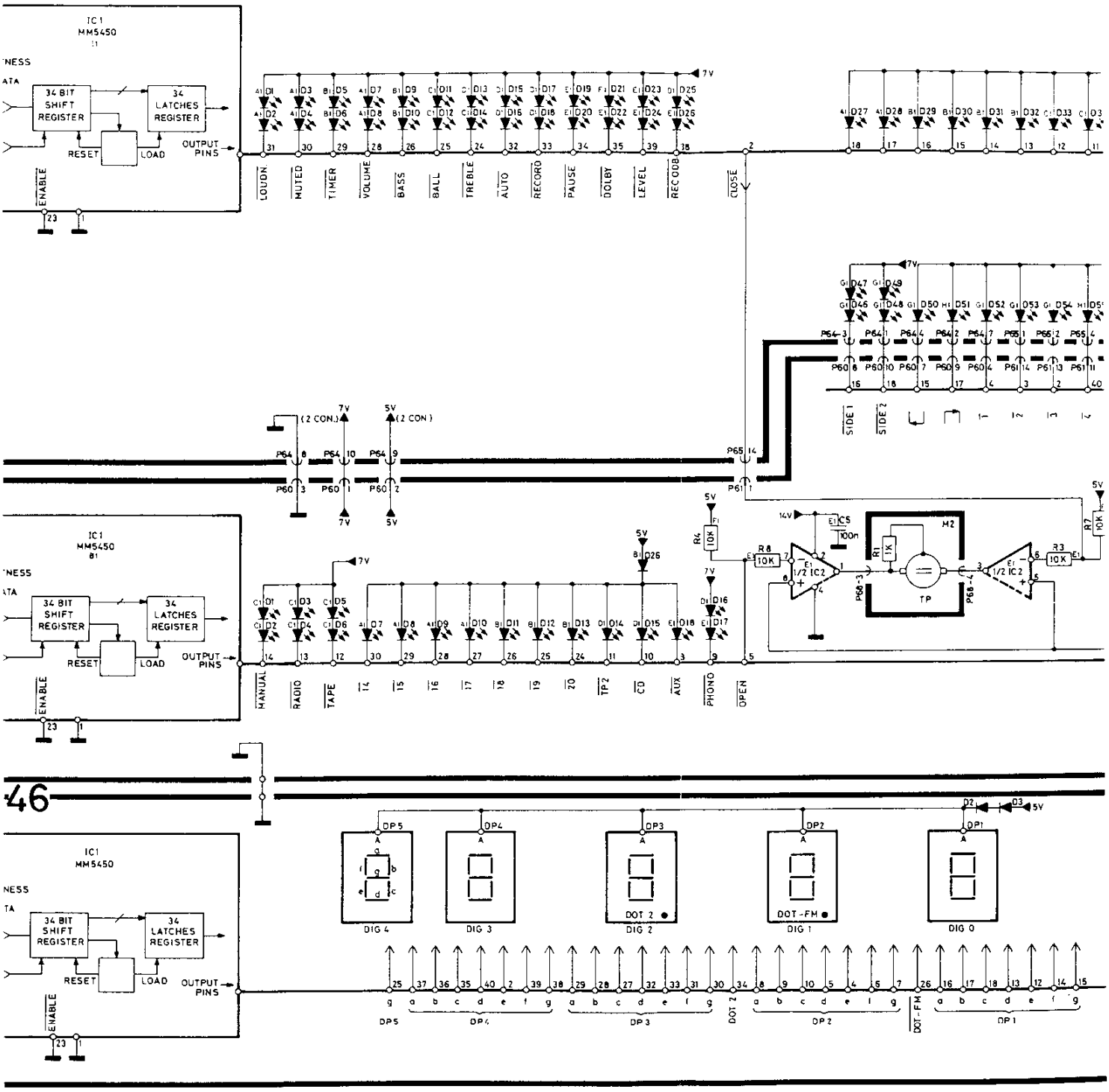

46

BER OF VOLTAGE CONNECTIONS

Bang & Olufsen

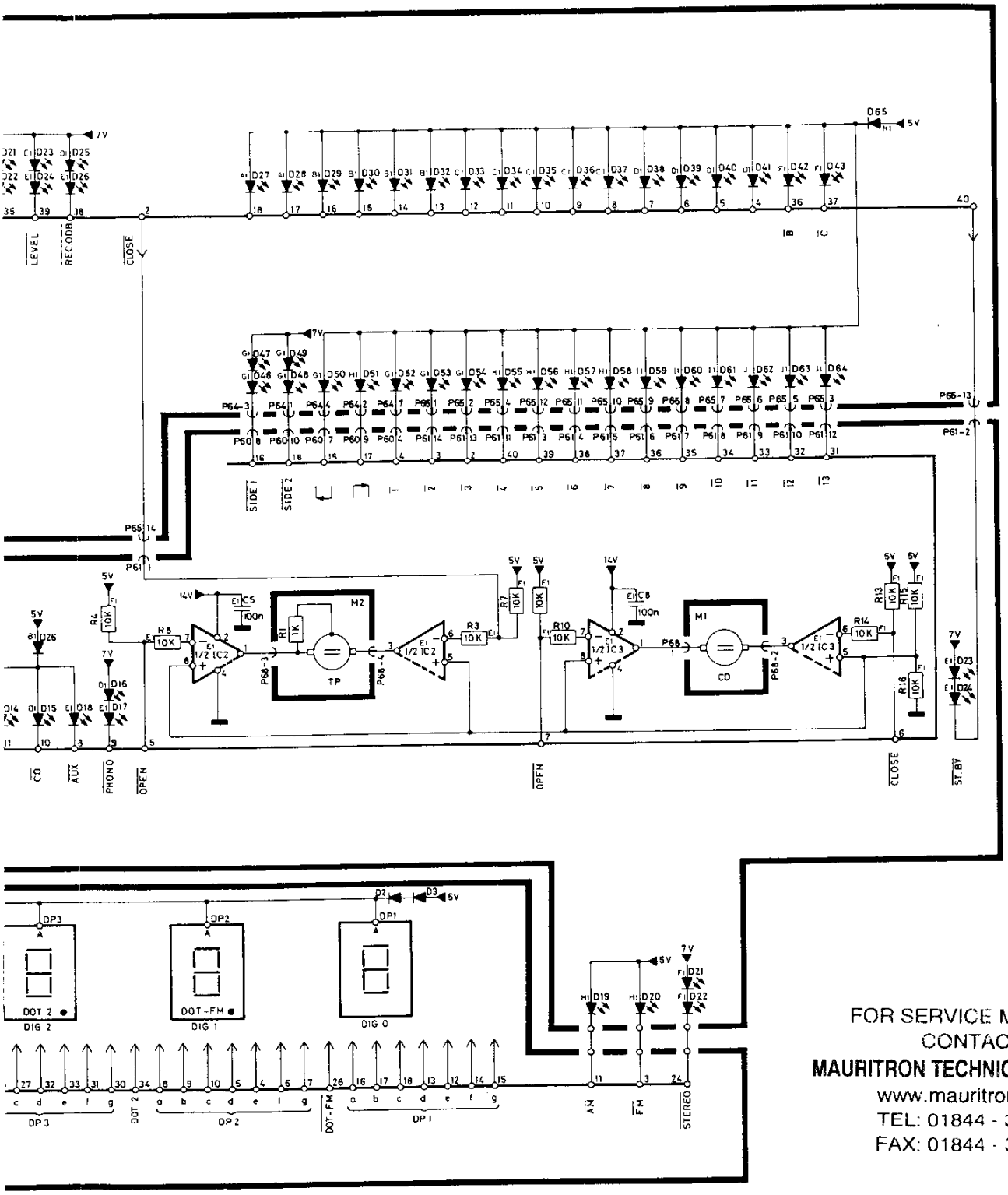

FOR SERVICE MANUALS
CONTACT:
MAURITRON TECHNICAL SERVICES
www.mauritron.co.uk
TEL: 01844 - 351694
FAX: 01844 - 352554

DIAGRAM J (Servo Disc Motor System)

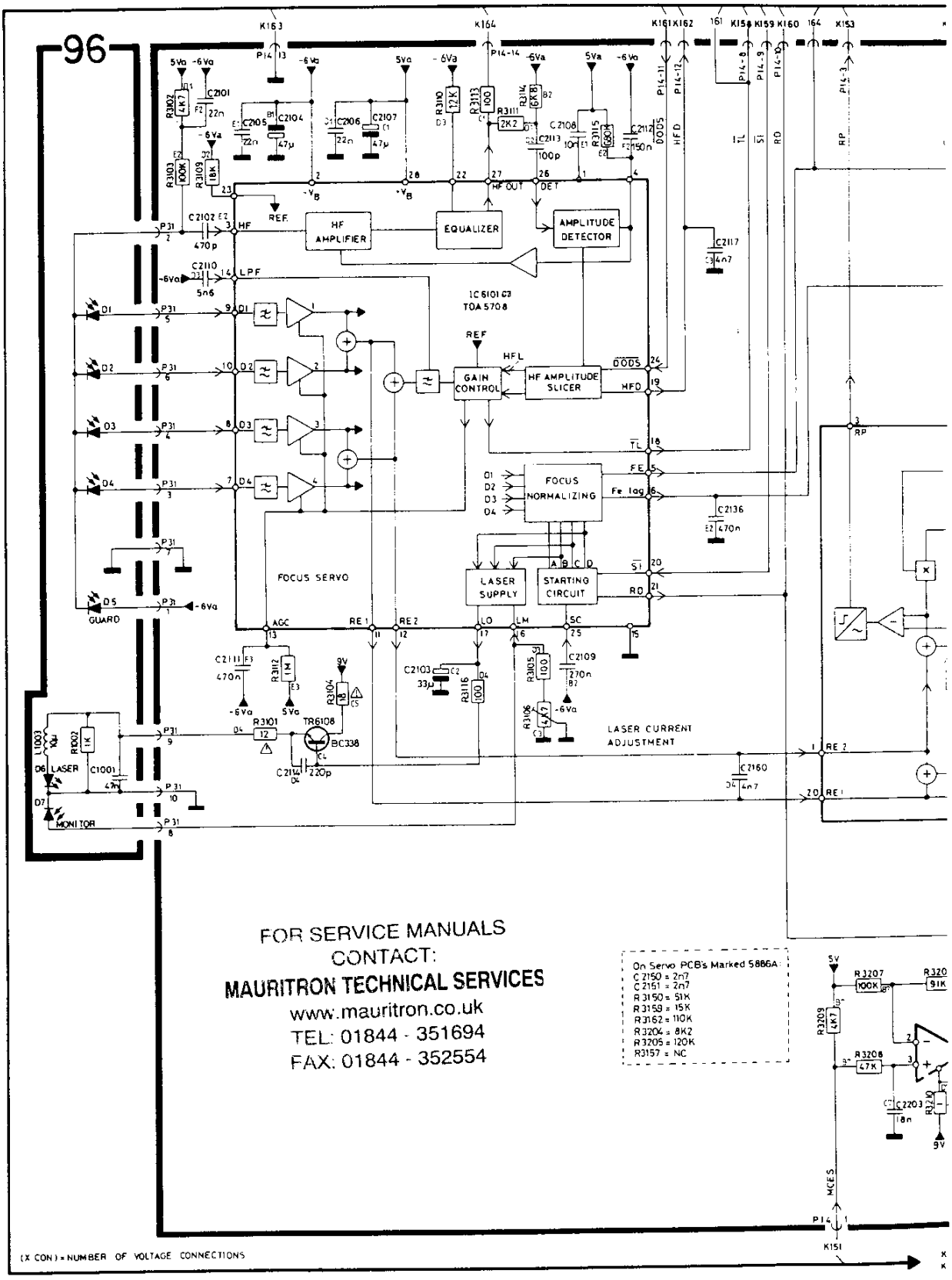

or System)

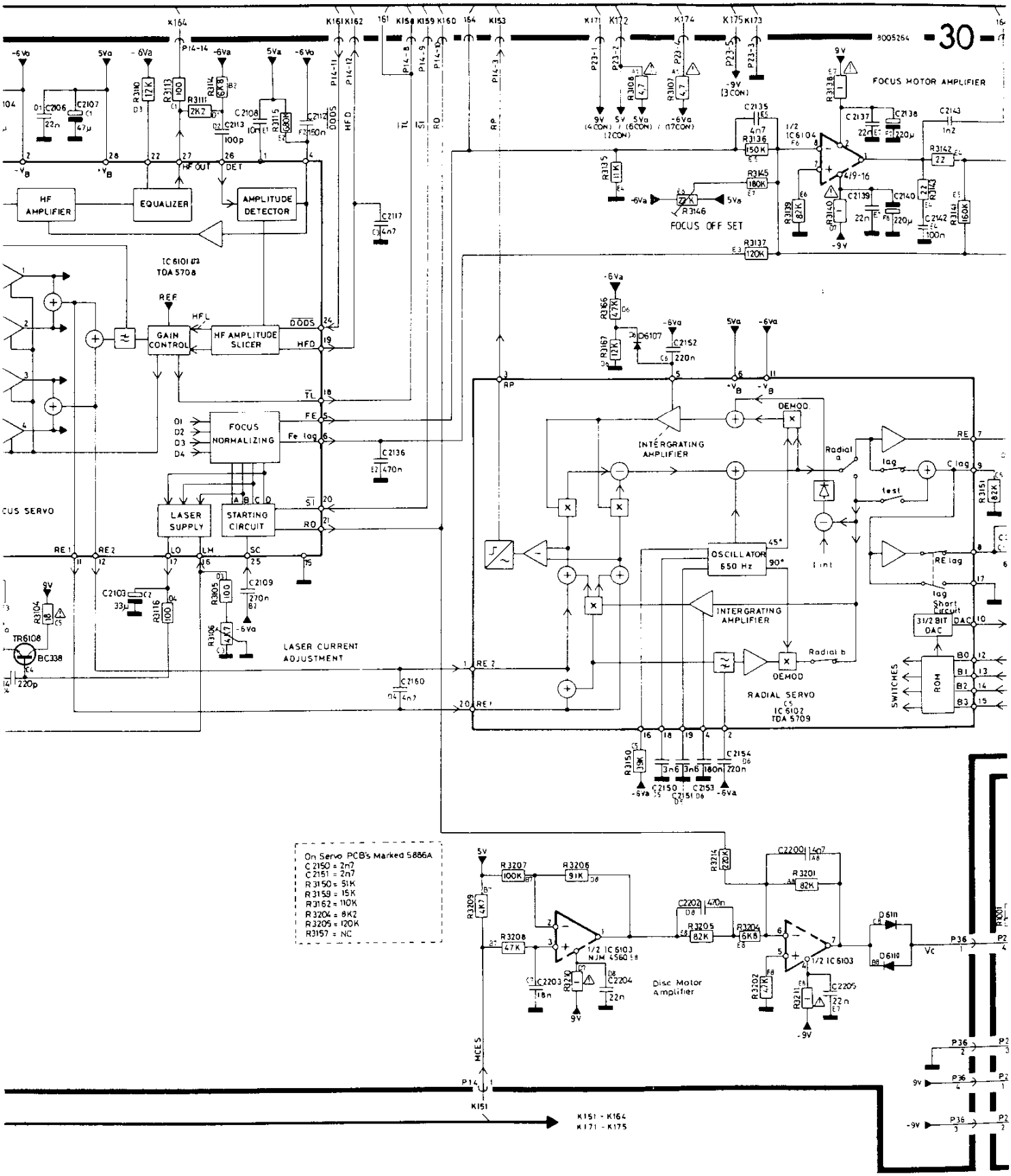
30
FOCUS MOTOR AMPLIFIER
FOCUS OFF SET
HF AMPLIFIER
EQUALIZER
AMPLITUDE DETECTOR
IC 6101
TDA 5708
GAIN CONTROL
HF AMPLITUDE SLICER
FOCUS NORMALIZING
LASER SUPPLY
STARTING CIRCUIT
LASER CURRENT ADJUSTMENT
INTERGRATING AMPLIFIER
DEMOD.
OSCILLATOR 650 Hz
INTERGRATING AMPLIFIER
DEMOD
RADIAL SERVO
IC 6102
TDA 5709
31/2 BIT DAC
ROM
SWITCHES
Disc Motor Amplifier
1/2 IC 6103
NJM 4560
On Servo PCB's Marked 5886A
C 2150 = 2n7
C 2151 = 2n7
R 3150 = 51K
R 3159 = 15K
R 3162 = 110K
R 3204 = 8K2
R 3205 = 120K
R 3157 = NC
K151 - K164
K171 - K175

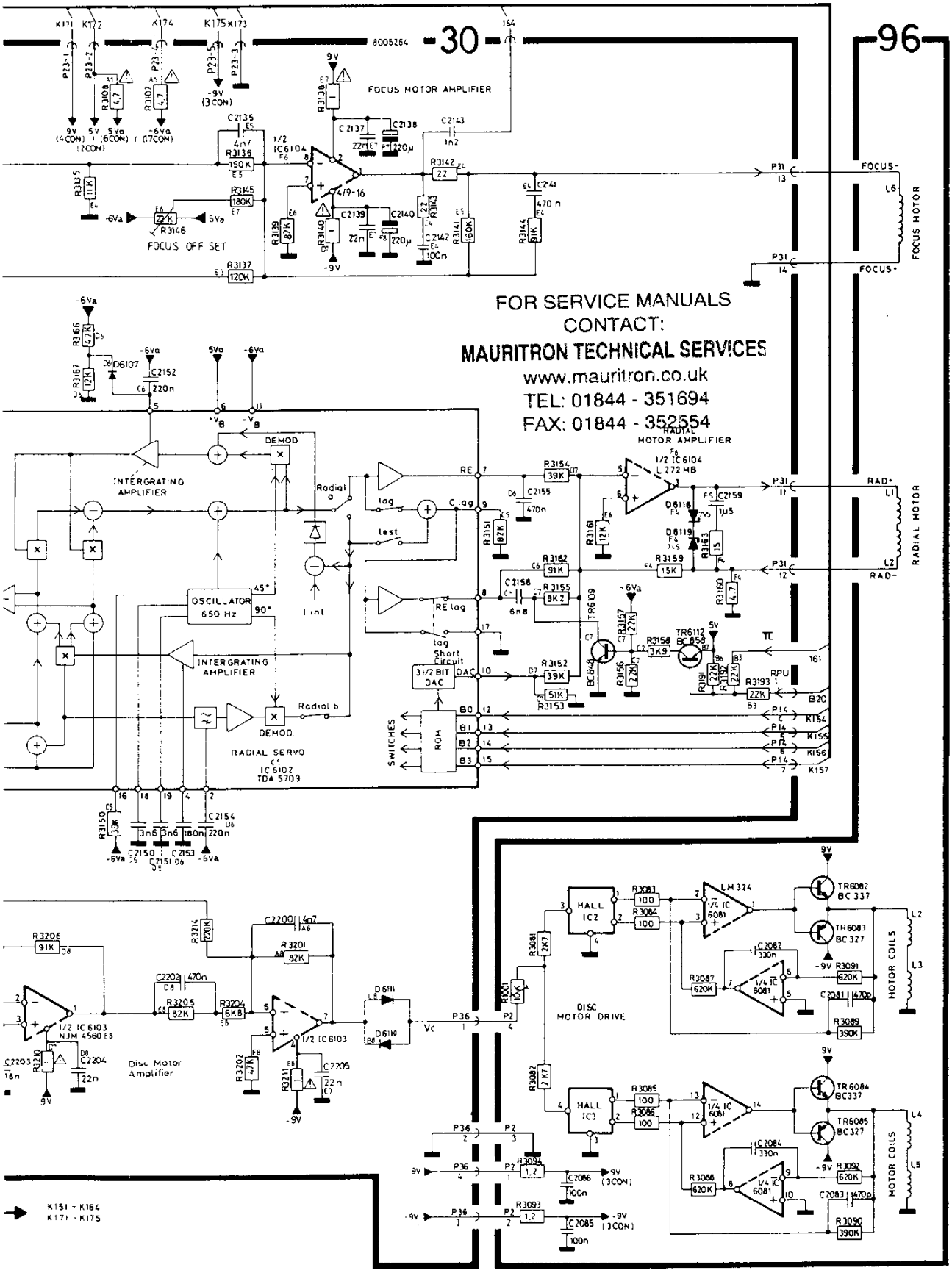

FOR SERVICE MANUALS
CONTACT:
MAURITRON TECHNICAL SERVICES
www.mauritron.co.uk
TEL: 01844 - 351694
FAX: 01844 - 352554

2-13

SERVO PCB30

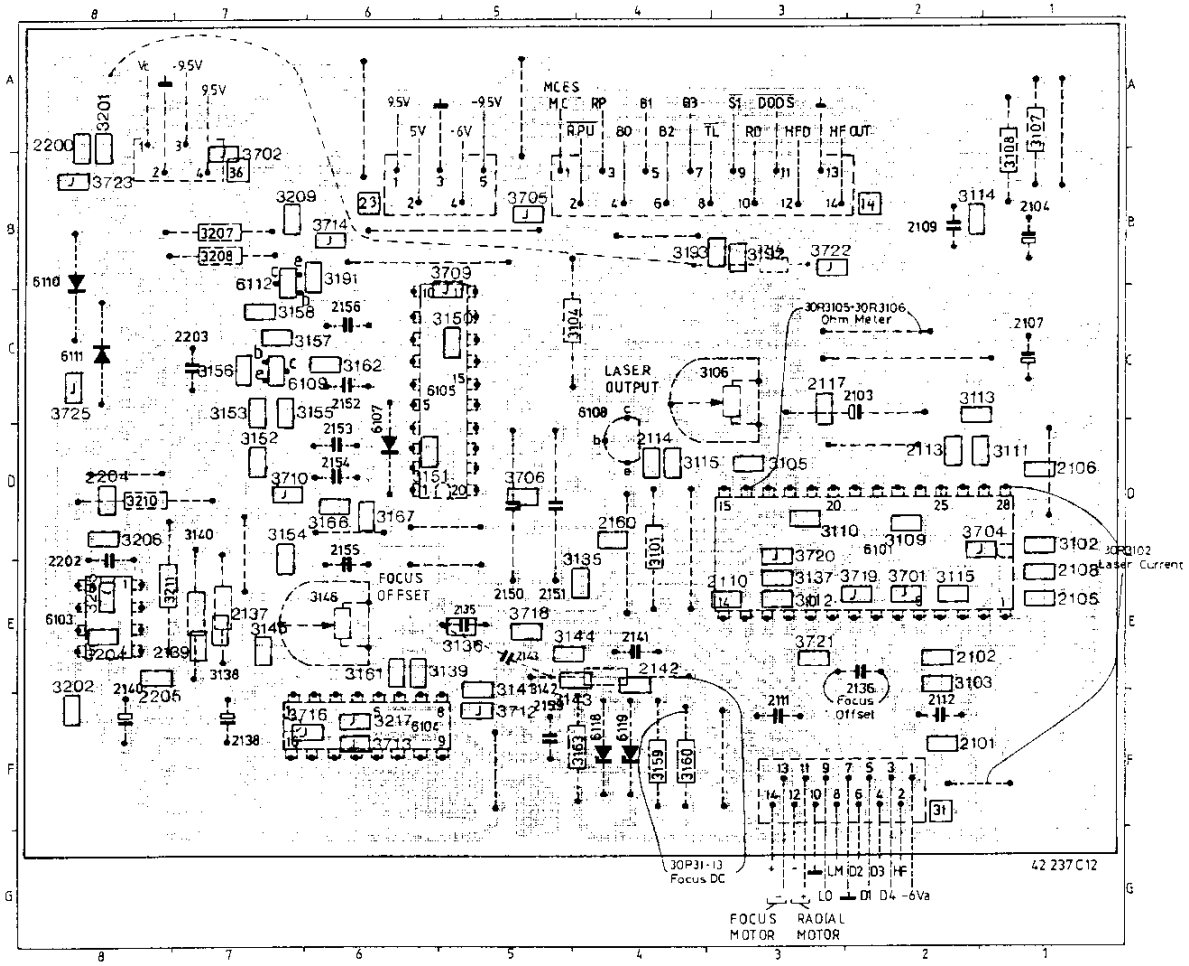

DISC MOTOR CONTROL

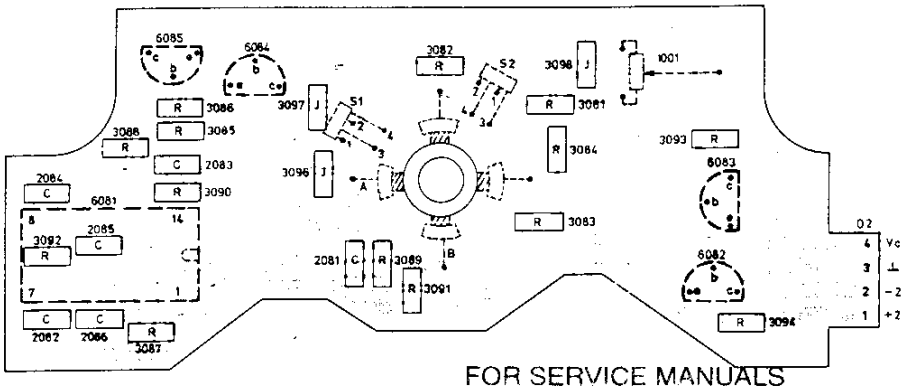

FOR SERVICE MANUALS
CONTACT:
MAURITRON TECHNICAL SERVICES
www.mauritron.co.uk
TEL: 01844 - 351694
FAX: 01844 - 352554

SERVO PCB30

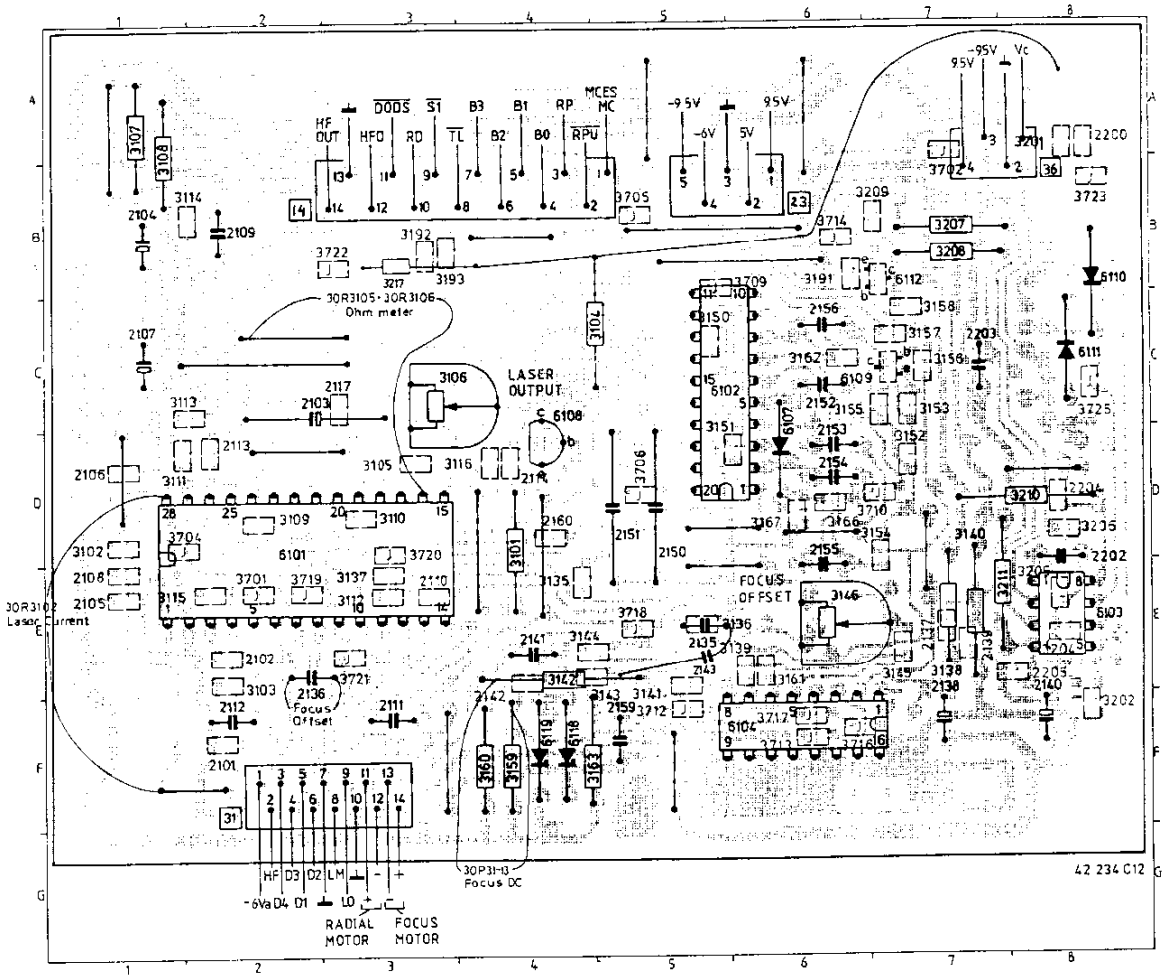

DISC MOTOR CONTROL

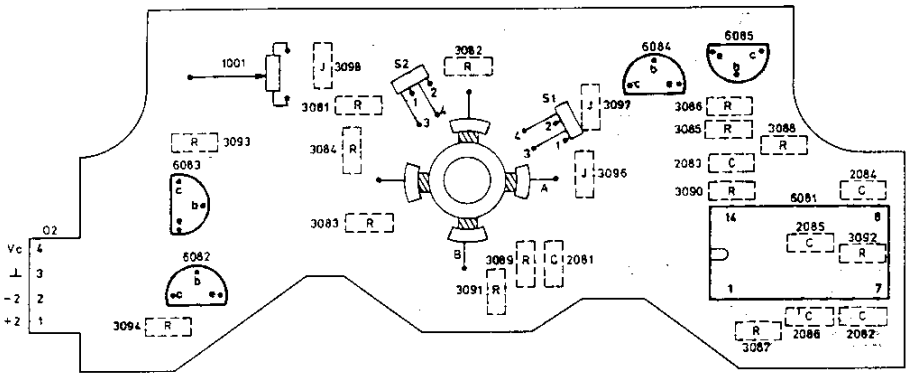

FOR SERVICE MANUALS
CONTACT:
MAURITRON TECHNICAL SERVICES
www.mauritron.co.uk
TEL: 01844 - 351694
FAX: 01844 - 352554

DIAGRAM K (Decoder)

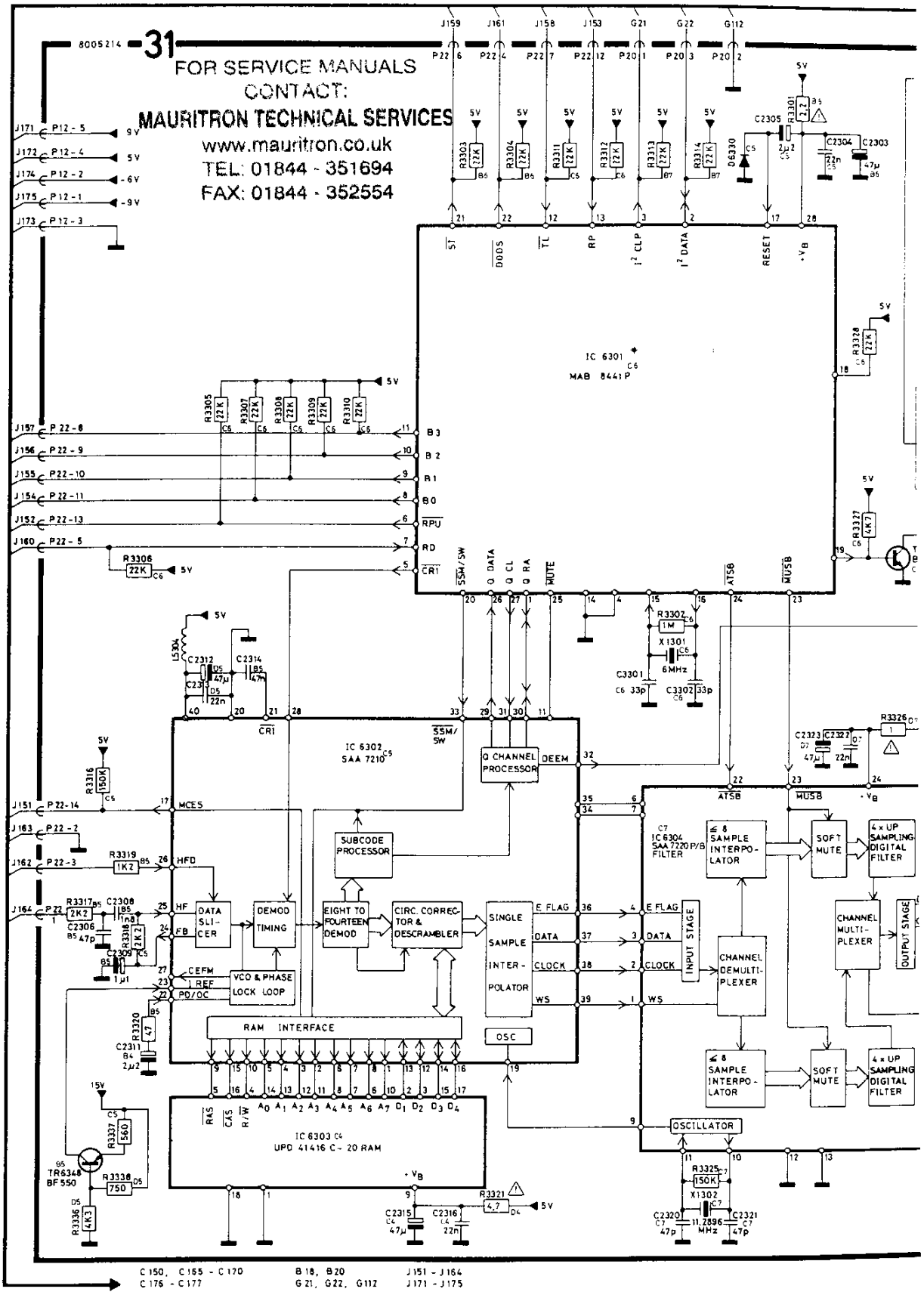

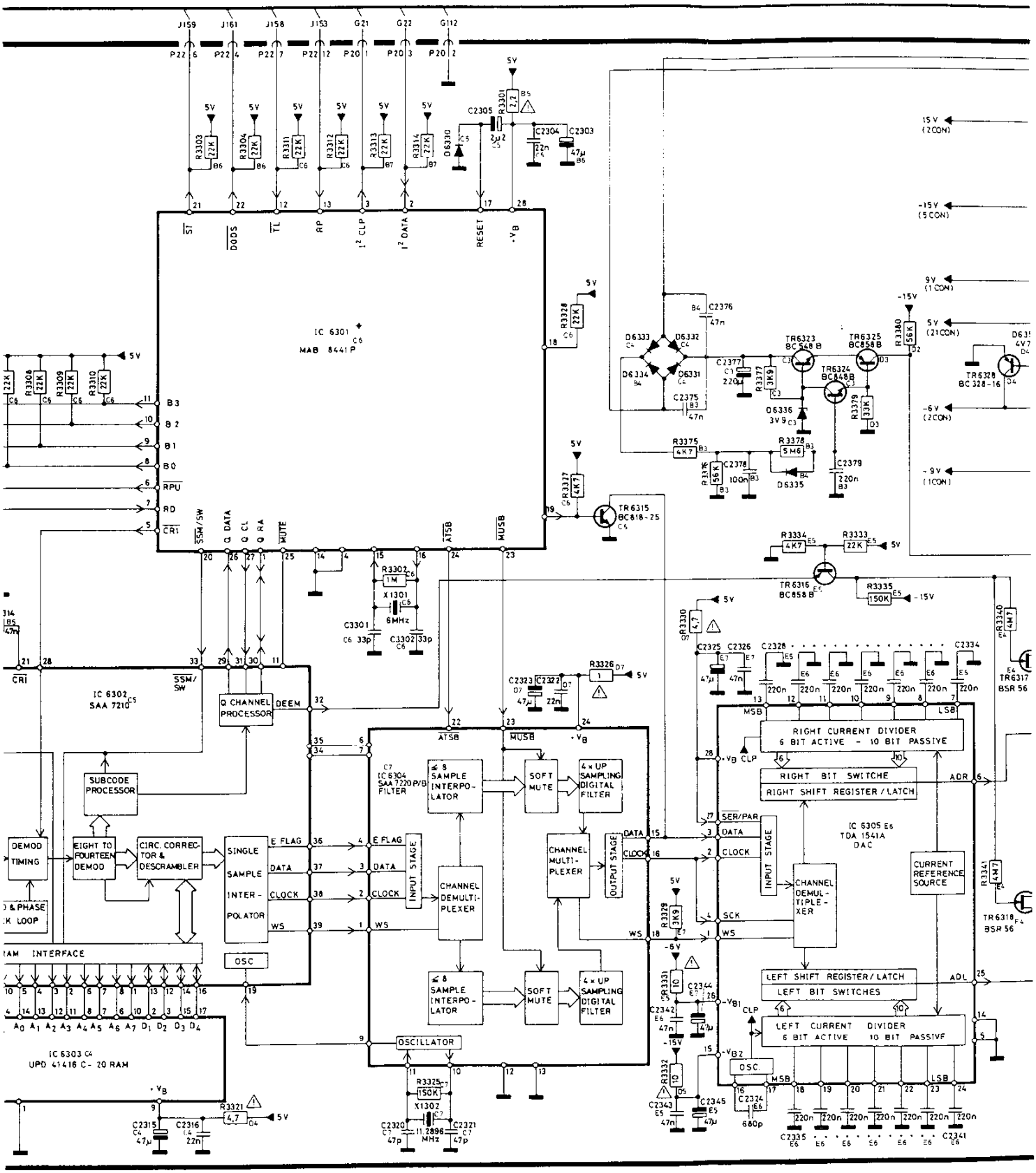

B18, B20 J151 - J164
G21, G22, G112 J171 - J175

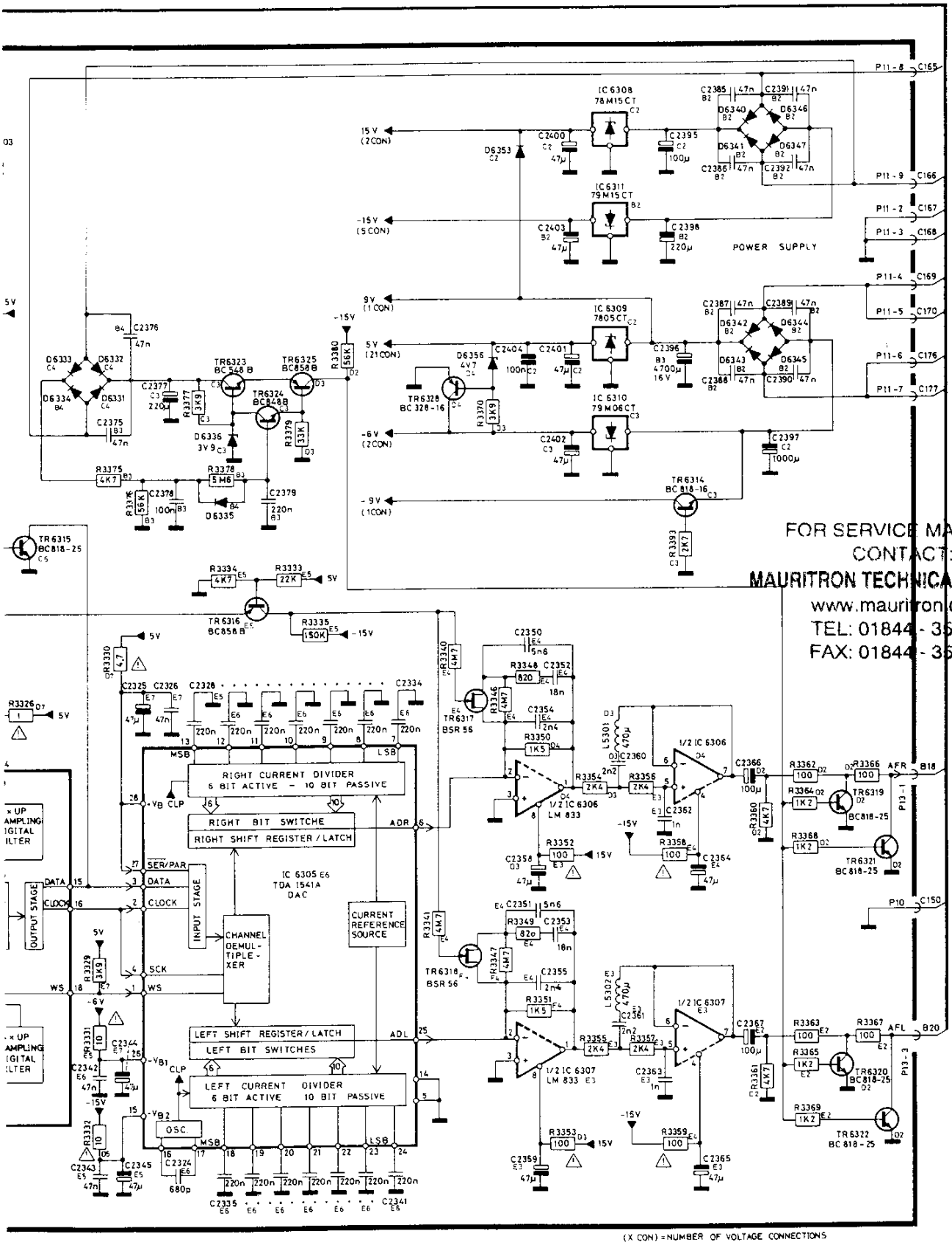

(X CON) = NUMBER OF VOLTAGE CONNECTIONS

2-15

FOR SERVICE MANUALS
CONTACT:
MAURITRON TECHNICAL SERVICES
www.mauritron.co.uk
TEL: 01844 - 351694
FAX: 01844 - 352554

DECODER PCB 31

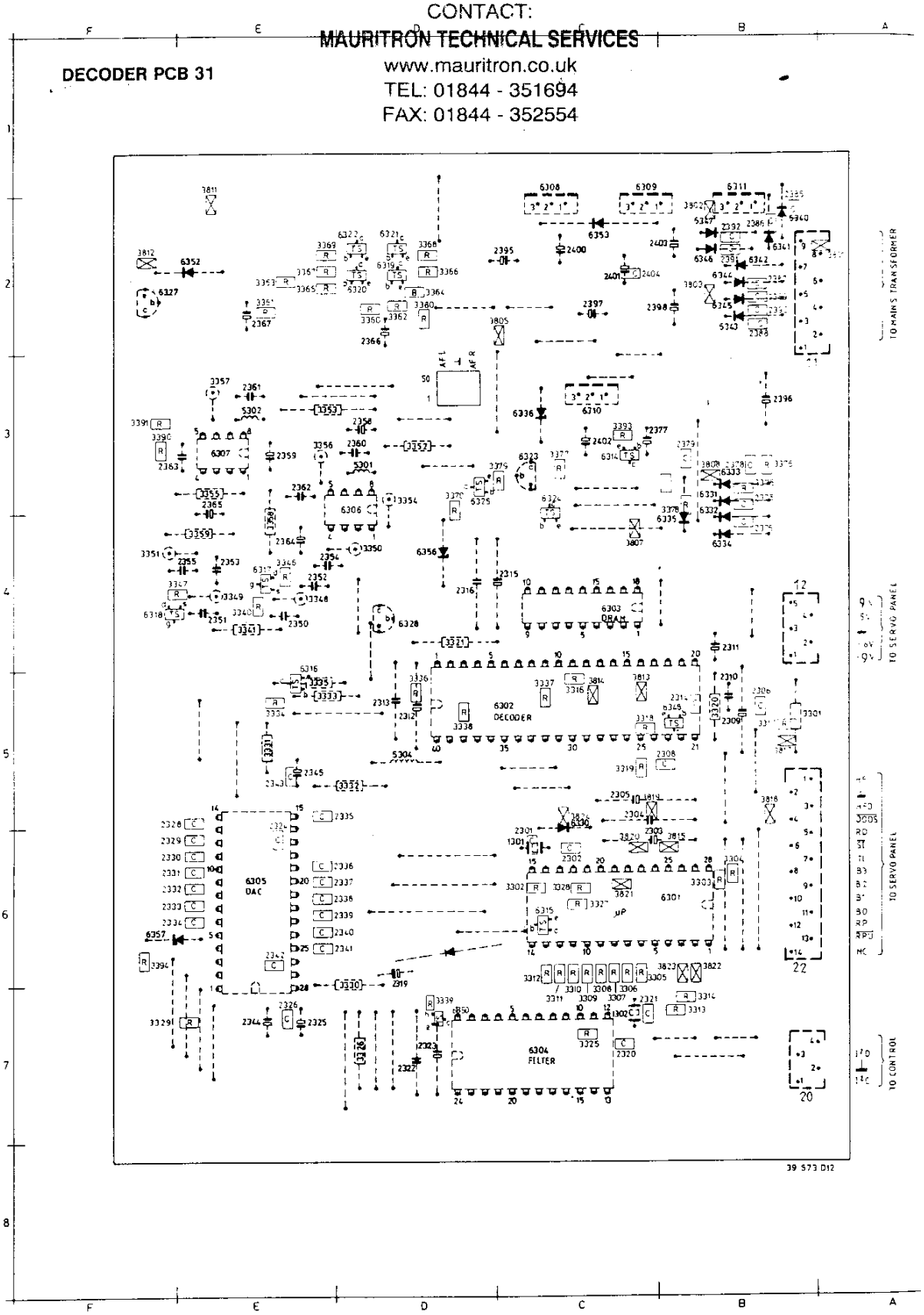

DECODER PCB 31

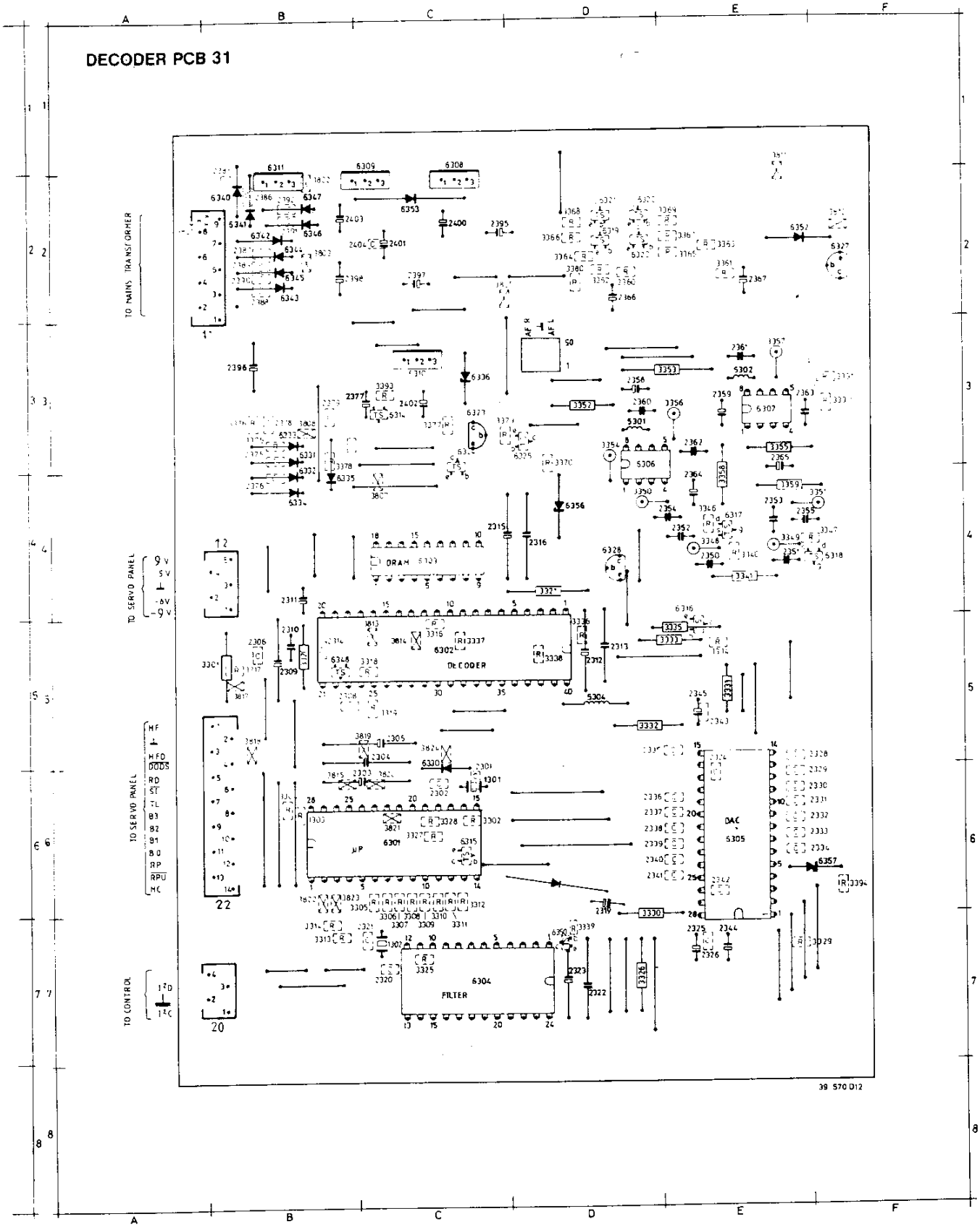

BLOCK DIAGRAM AM-FM

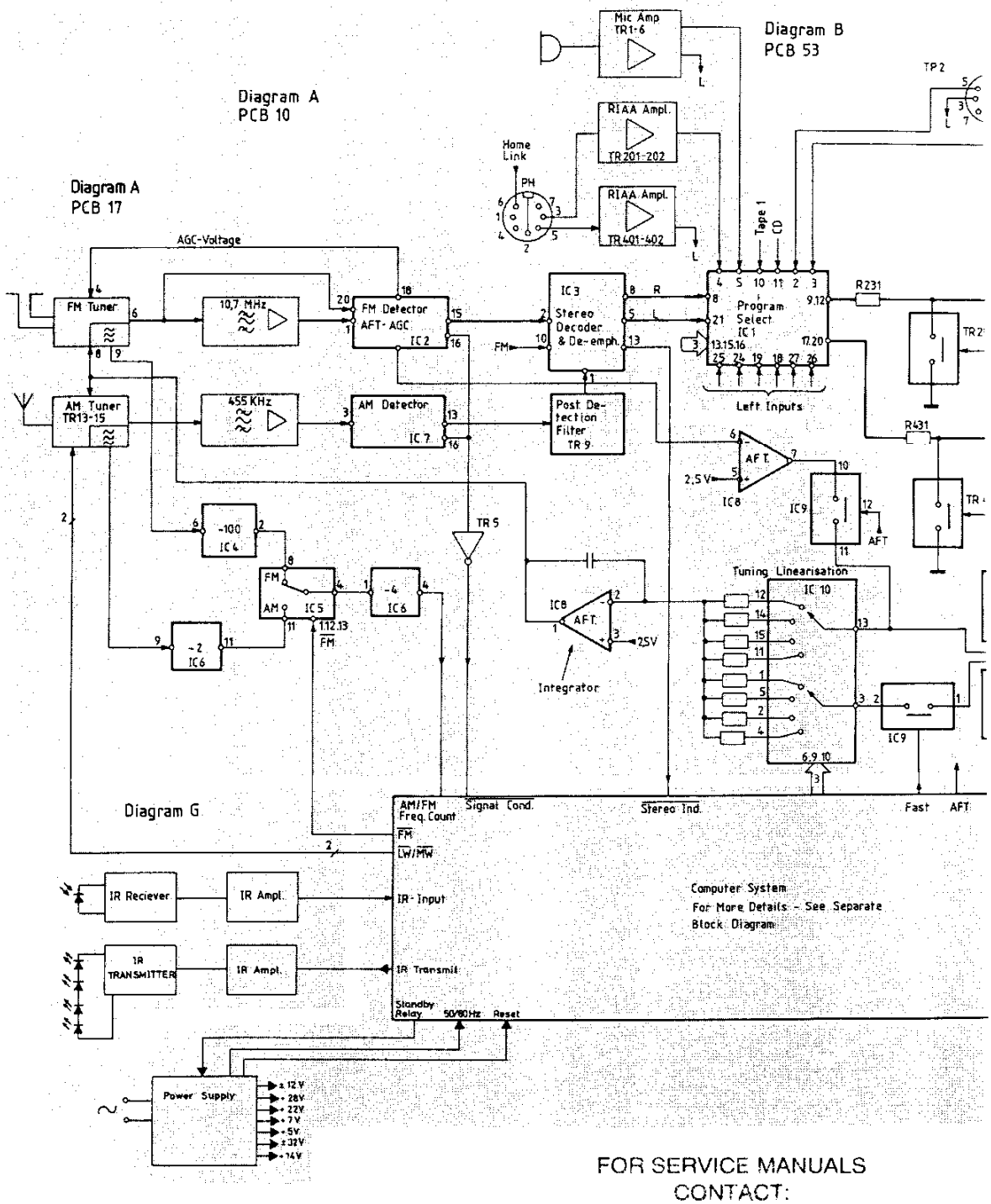

FOR SERVICE MANUALS
CONTACT:
MAURITRON TECHNICAL SERVICES
www.mauritron.co.uk
TEL: 01844 - 351694
FAX: 01844 - 352554

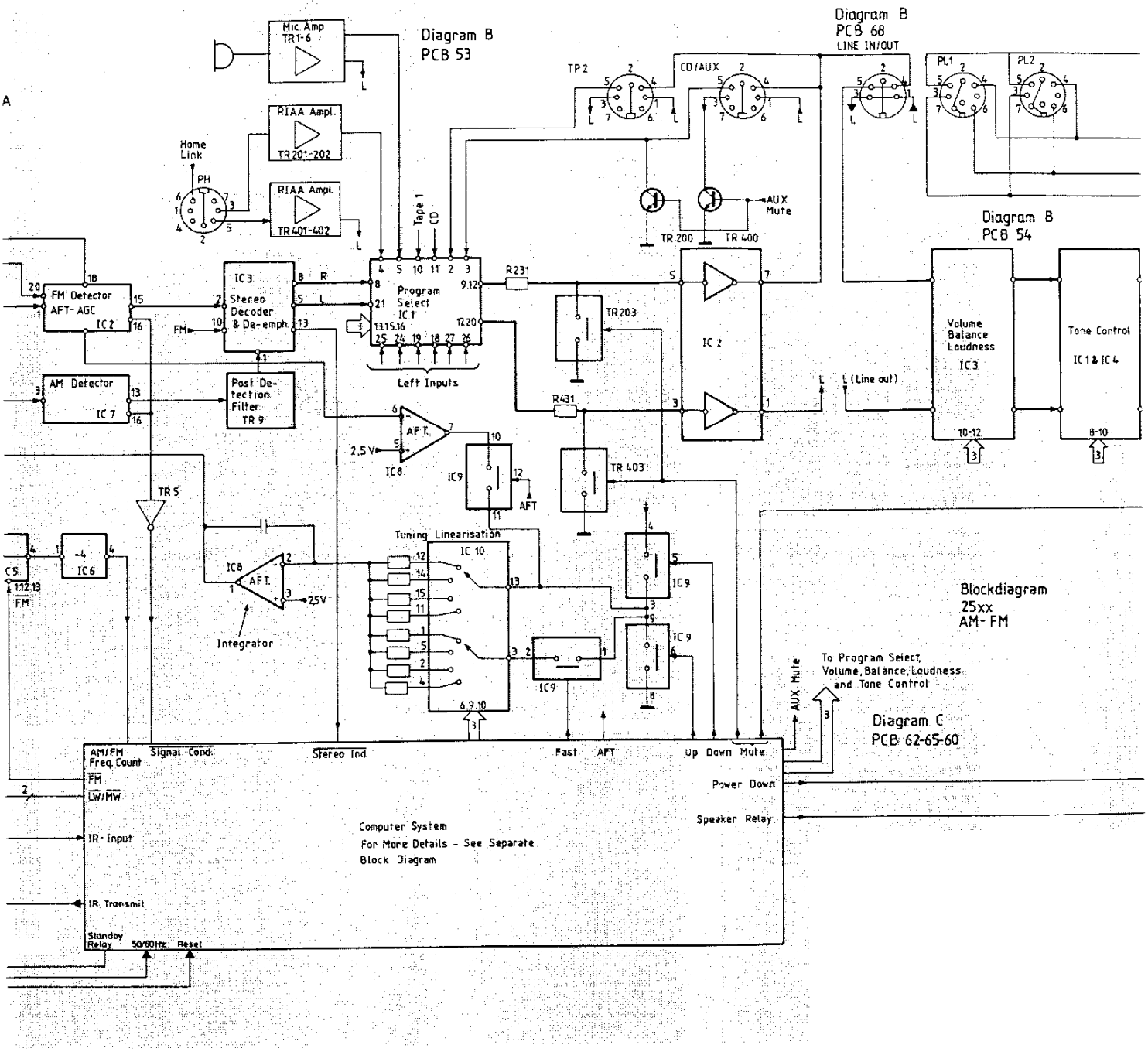
Diagram B
PCB 53
Diagram B
PCB 68
LINE IN/OUT
Diagram B
PCB 54
Mic. Amp
TR1-6
RIAA Ampl.
TR 201-202
RIAA Ampl.
TR 401-402
Home Link
PH
Tape 1
CD
TP 2
CD/AUX
PL1
PL2
AUX Mute
TR 200
TR 400
FM Detector
AFT-AGC
IC 2
IC 3
Stereo Decoder & De-emph.
Program Select
IC 1
Left Inputs
R231
TR 203
IC 2
R431
TR 403
Volume Balance Loudness
IC 3
Tone Control
IC 1 & IC 4
L (Line out)
AM Detector
IC 7
Post De-tection Filter
TR 9
AFT
IC 8
IC 9
TR 5
IC 6
Tuning Linearisation
IC 10
Integrator
Blockdiagram
25xx
AM-FM
To Program Select, Volume, Balance, Loudness and Tone Control
Diagram C
PCB 62-65-60
AM/FM Freq. Count
Signal Cond.
Stereo Ind.
Fast
AFT
Up
Down
Mute
Power Down
Speaker Relay
FM
LW/MW
IR-Input
IR Transmit
Standby Relay
50/60Hz
Reset
Computer System
For More Details - See Separate Block Diagram

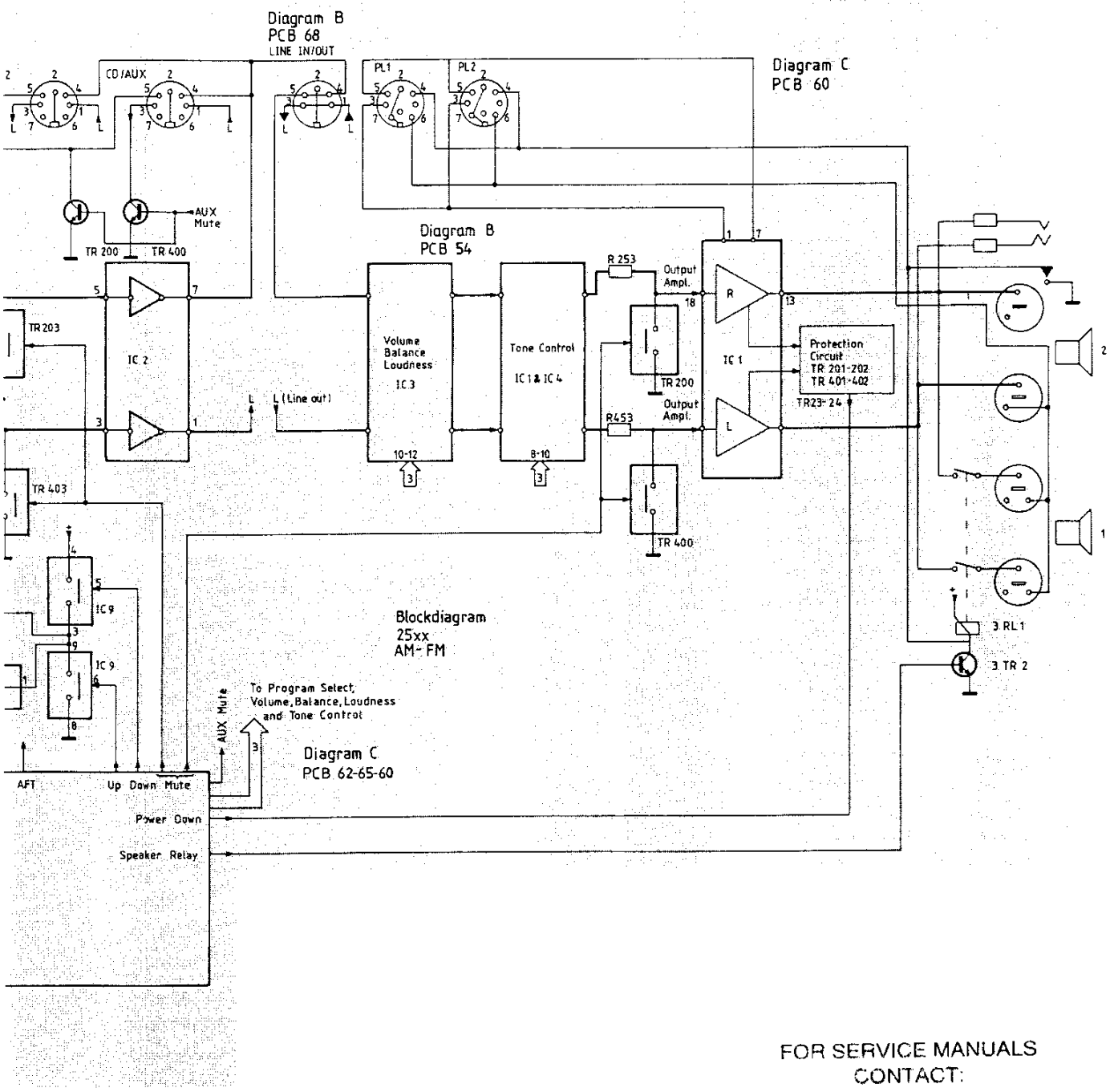

FOR SERVICE MANUALS
CONTACT:
MAURITRON TECHNICAL SERVICES
www.mauritron.co.uk
TEL: 01844 - 351694
FAX: 01844 - 352554

2-17

BLOCK DIAGRAM RECORDING R-CHANNEL

Recording R-Channel
PCB 20
25xx

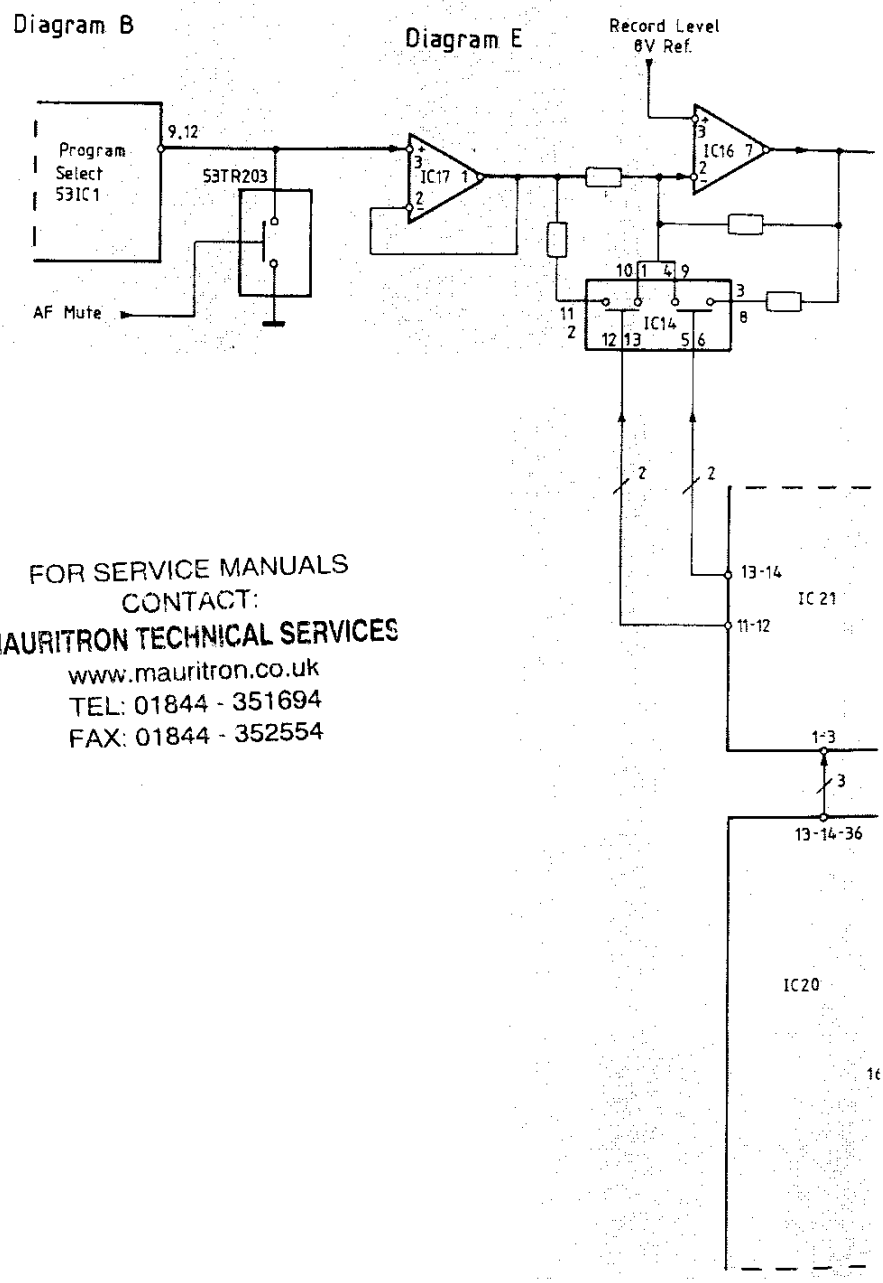

FOR SERVICE MANUALS
CONTACT:
MAURITRON TECHNICAL SERVICES
www.mauritron.co.uk
TEL: 01844 - 351694
FAX: 01844 - 352554

R-CHANNEL

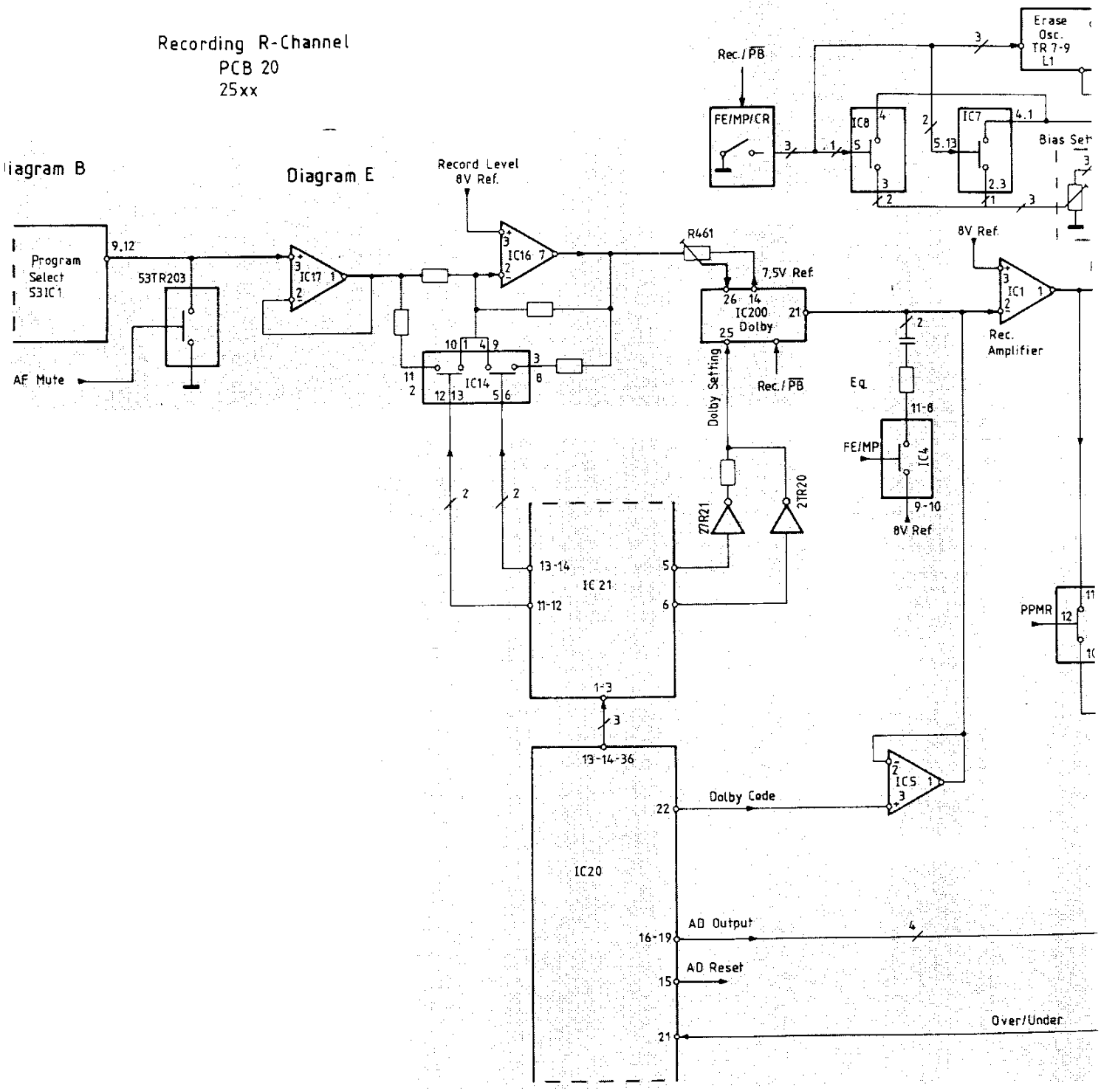
Recording R-Channel
PCB 20
25xx
Diagram B
Diagram E
Program Select 53IC1
9.12
53TR203
AF Mute
IC17
Record Level 8V Ref.
IC16
IC14
R461
7,5V Ref.
IC200 Dolby
Dolby Setting
Rec./PB
27R21
27R20
IC 21
13-14
11-12
1-3
13-14-36
IC20
Dolby Code
IC5
AD Output
AD Reset
Over/Under
Rec./PB
FE/MP/CR
IC8
IC7
Bias Set
Erase Osc. TR 7-9 L1
8V Ref.
IC1
Rec. Amplifier
Eq.
FE/MP
IC4
8V Ref
PPMR

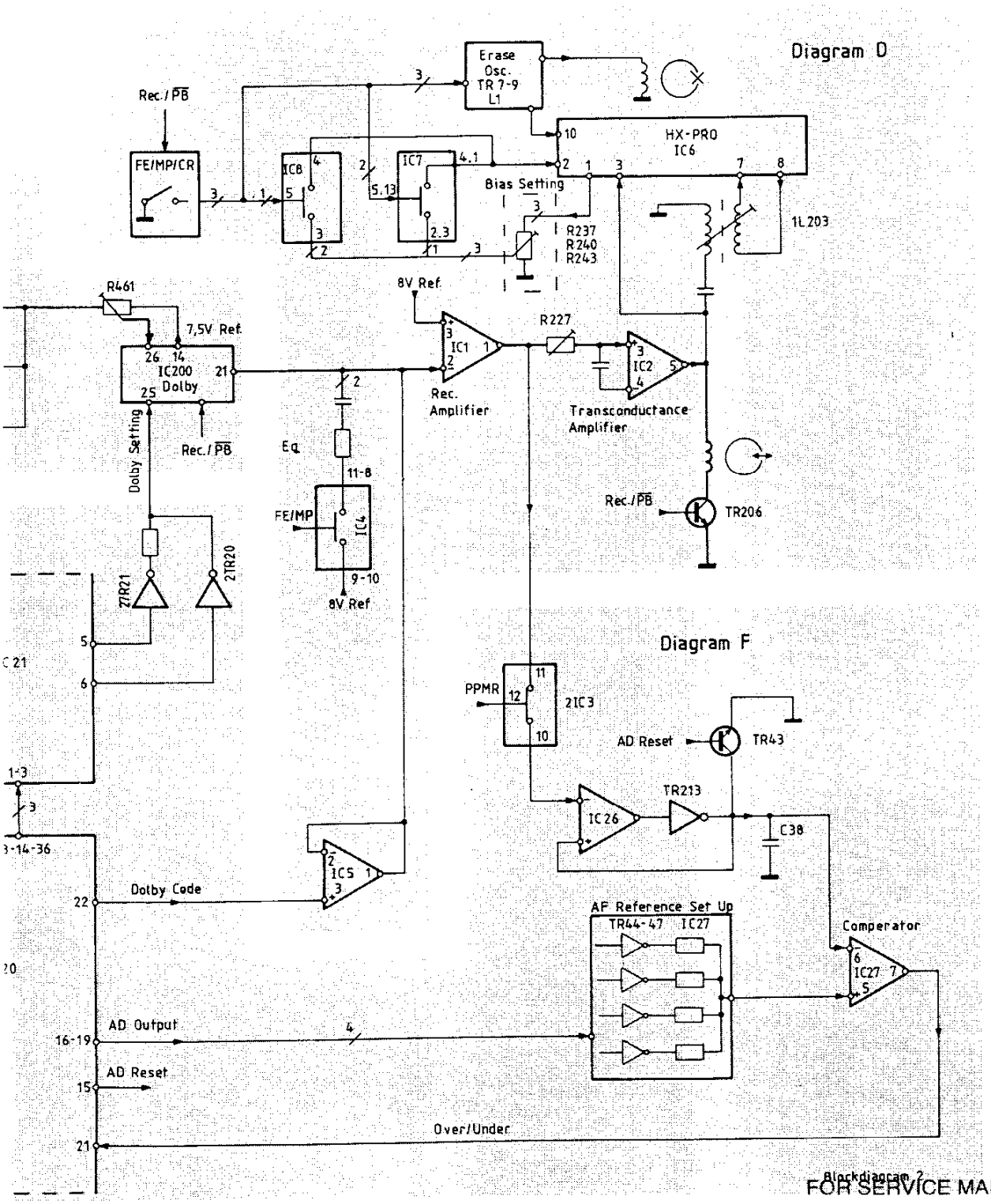

Blockdiagram 2

FOR SERVICE MANUALS
CONTACT:
MAURITRON TECHNICAL SERVICES
www.mauritron.co.uk
TEL: 01844 - 351694
FAX: 01844 - 352554

BLOCK DIAGRAM PLAY BACK R-CHANNEL

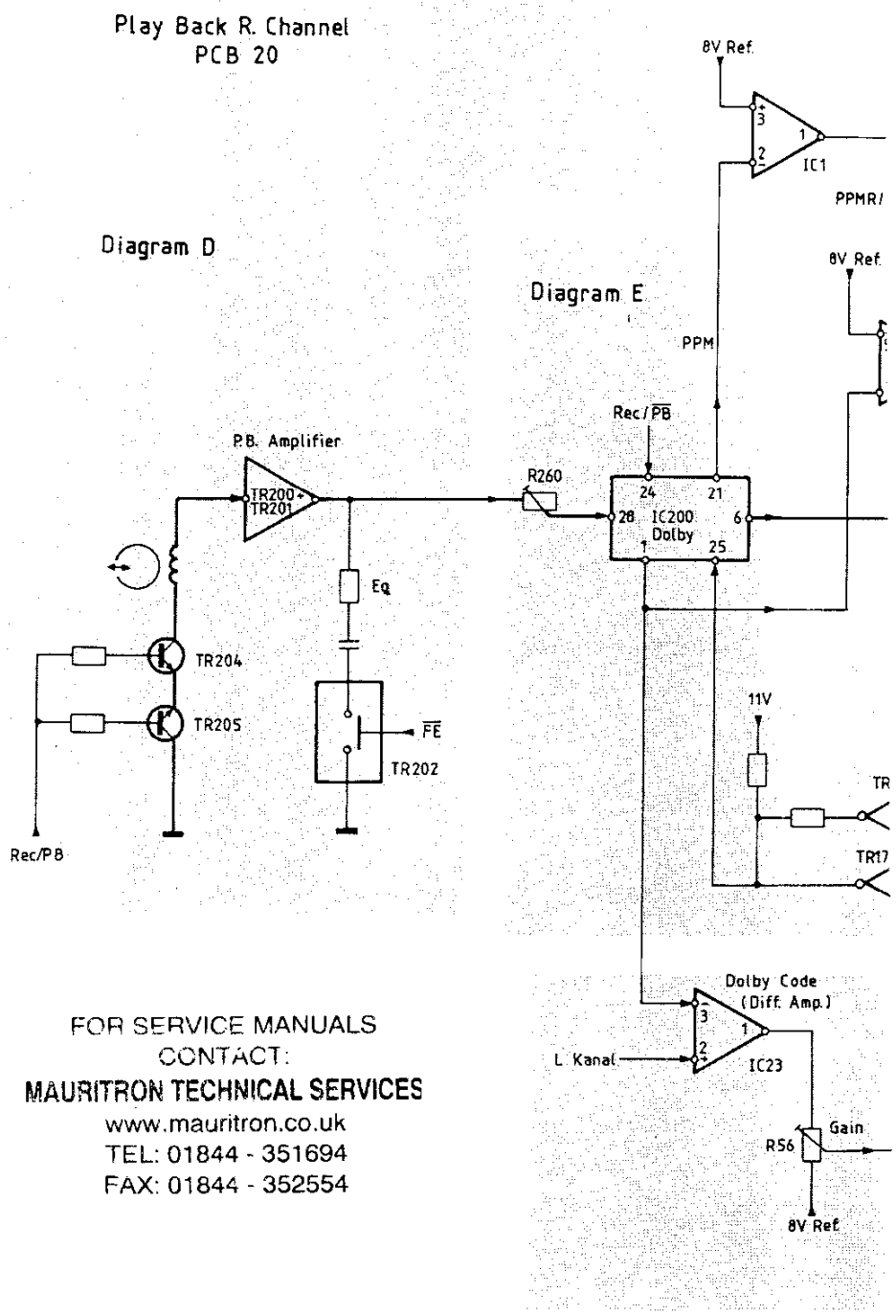

FOR SERVICE MANUALS
CONTACT:
MAURITRON TECHNICAL SERVICES
www.mauritron.co.uk
TEL: 01844 - 351694
FAX: 01844 - 352554

LAY BACK R-CHANNEL

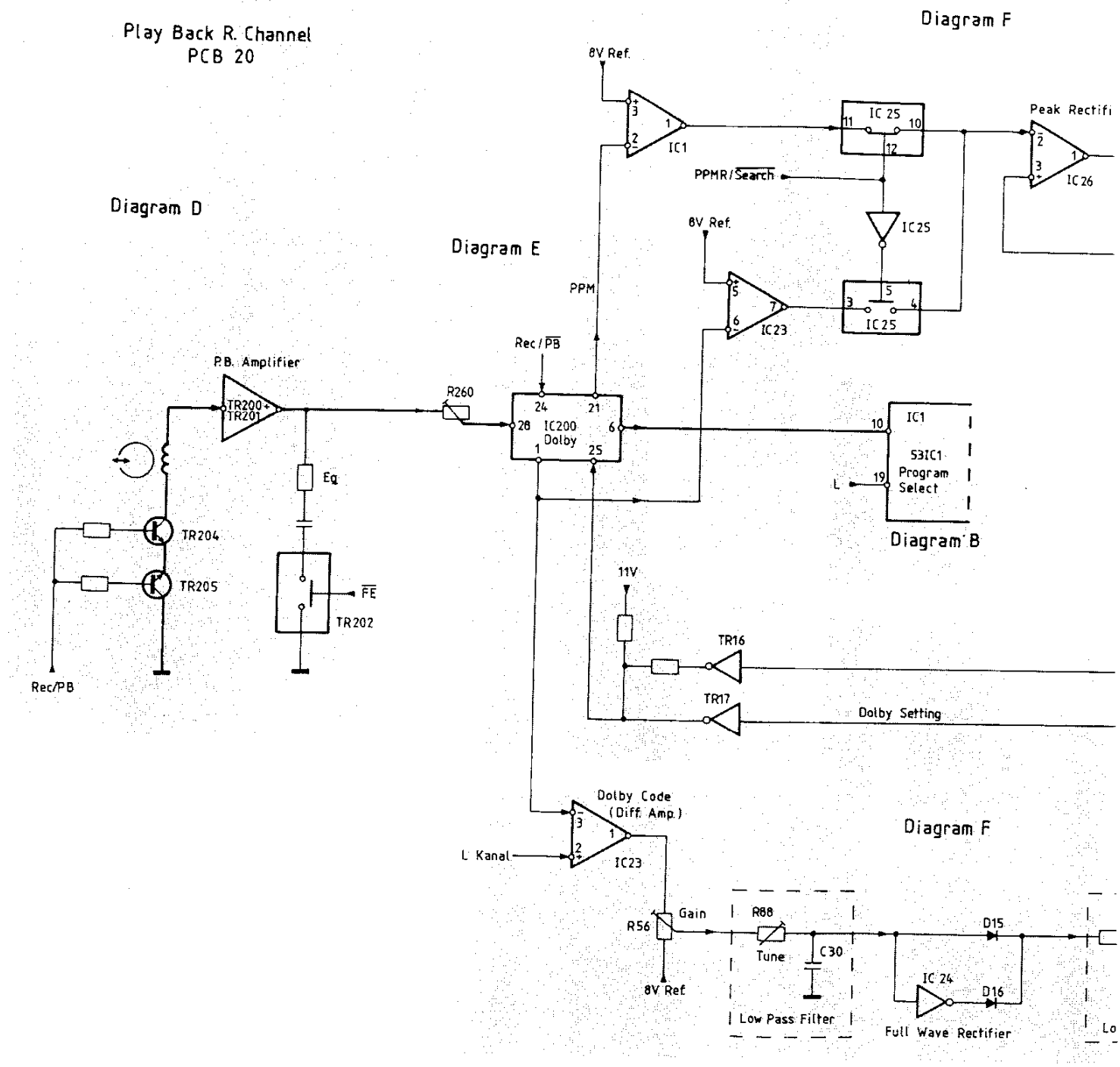

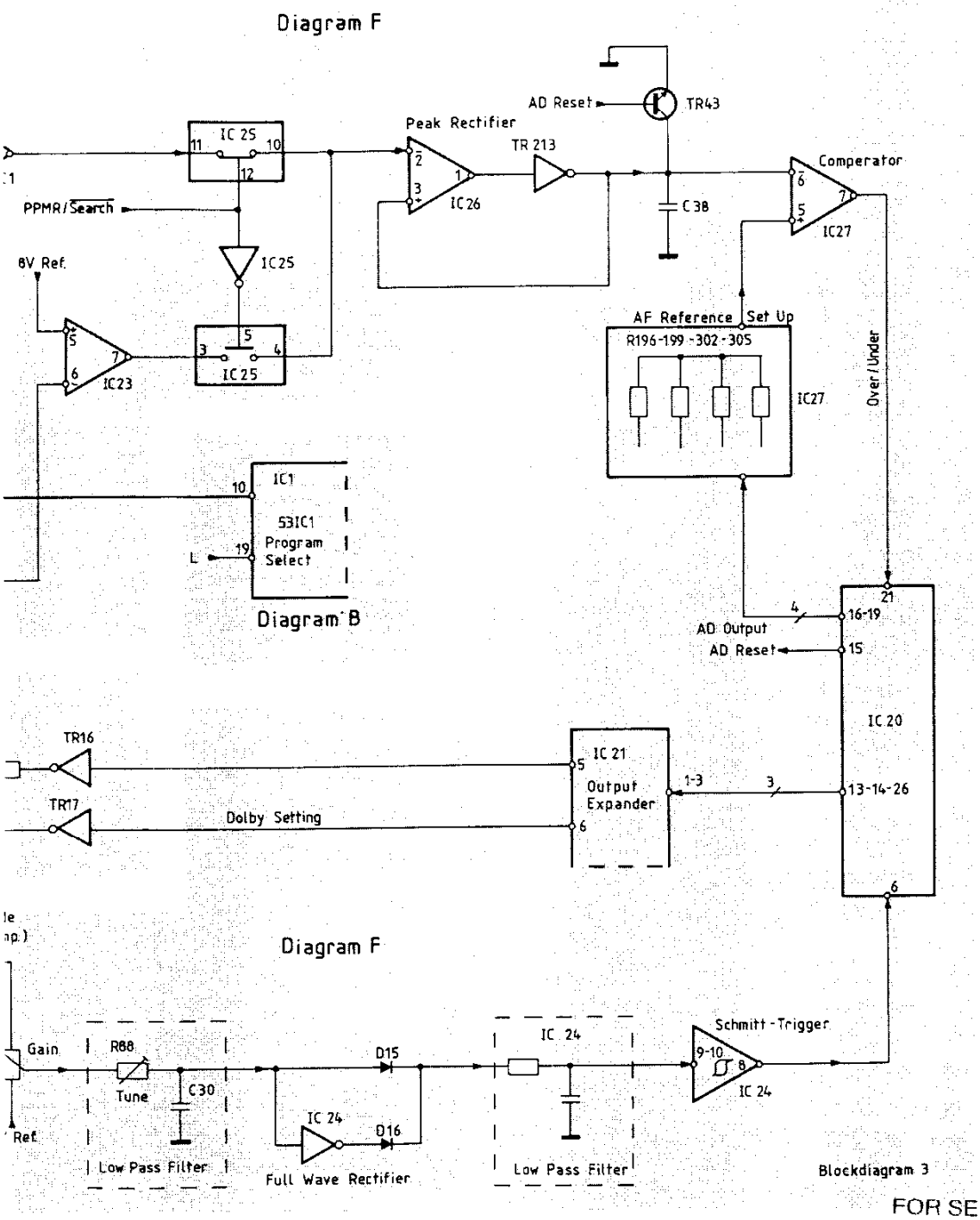

Blockdiagram 3- 25xx

FOR SERVICE MANUALS
CONTACT:
MAURITRON TECHNICAL SERVICES
www.mauritron.co.uk
TEL: 01844 - 351694
FAX: 01844 - 352554

2-19

BLOCK DIAGRAM COMPUTER SYSTEM

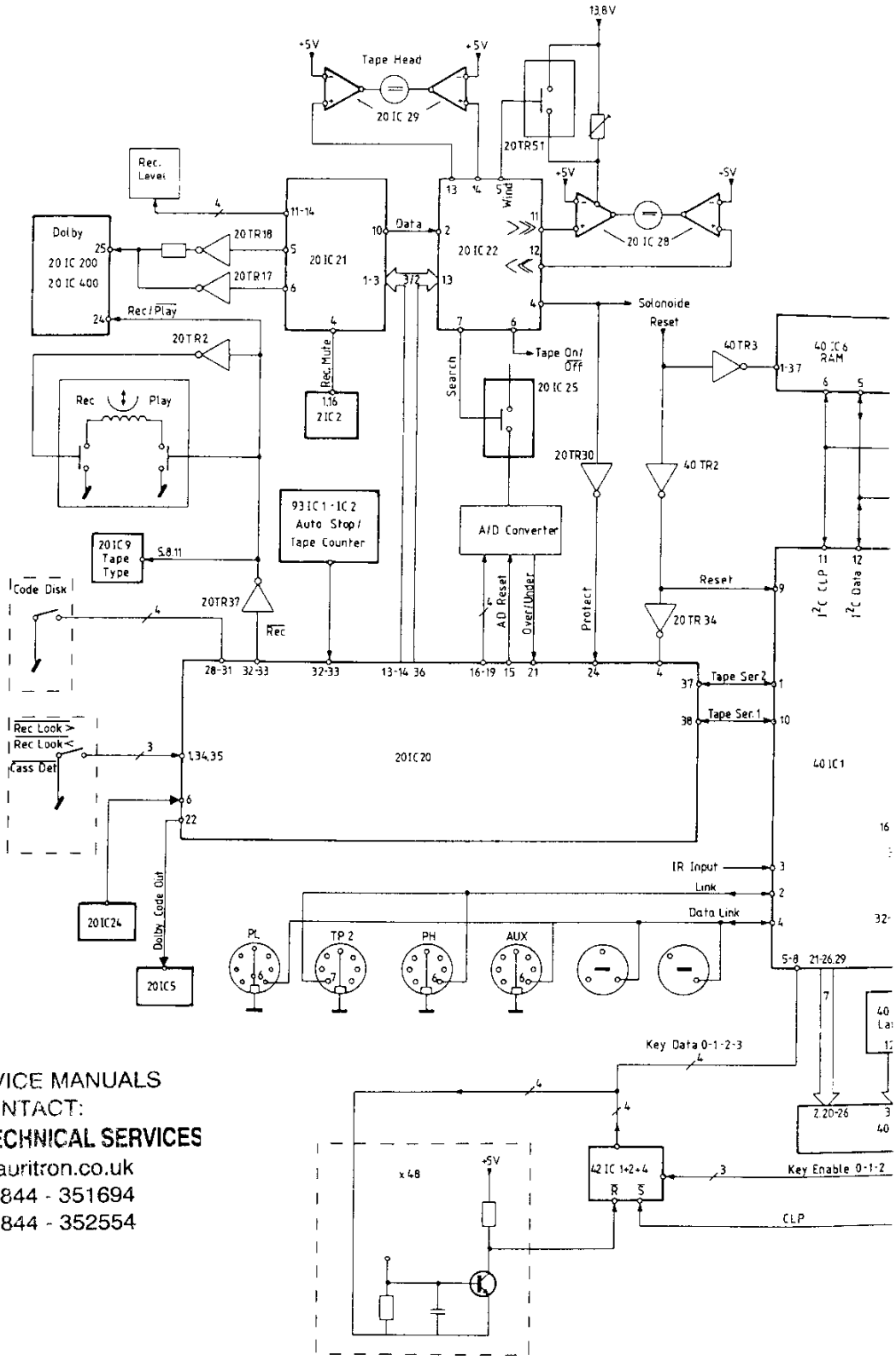

FOR SERVICE MANUALS
CONTACT:
MAURITRON TECHNICAL SERVICES
www.mauritron.co.uk
TEL: 01844 - 351694
FAX: 01844 - 352554

YSTEM

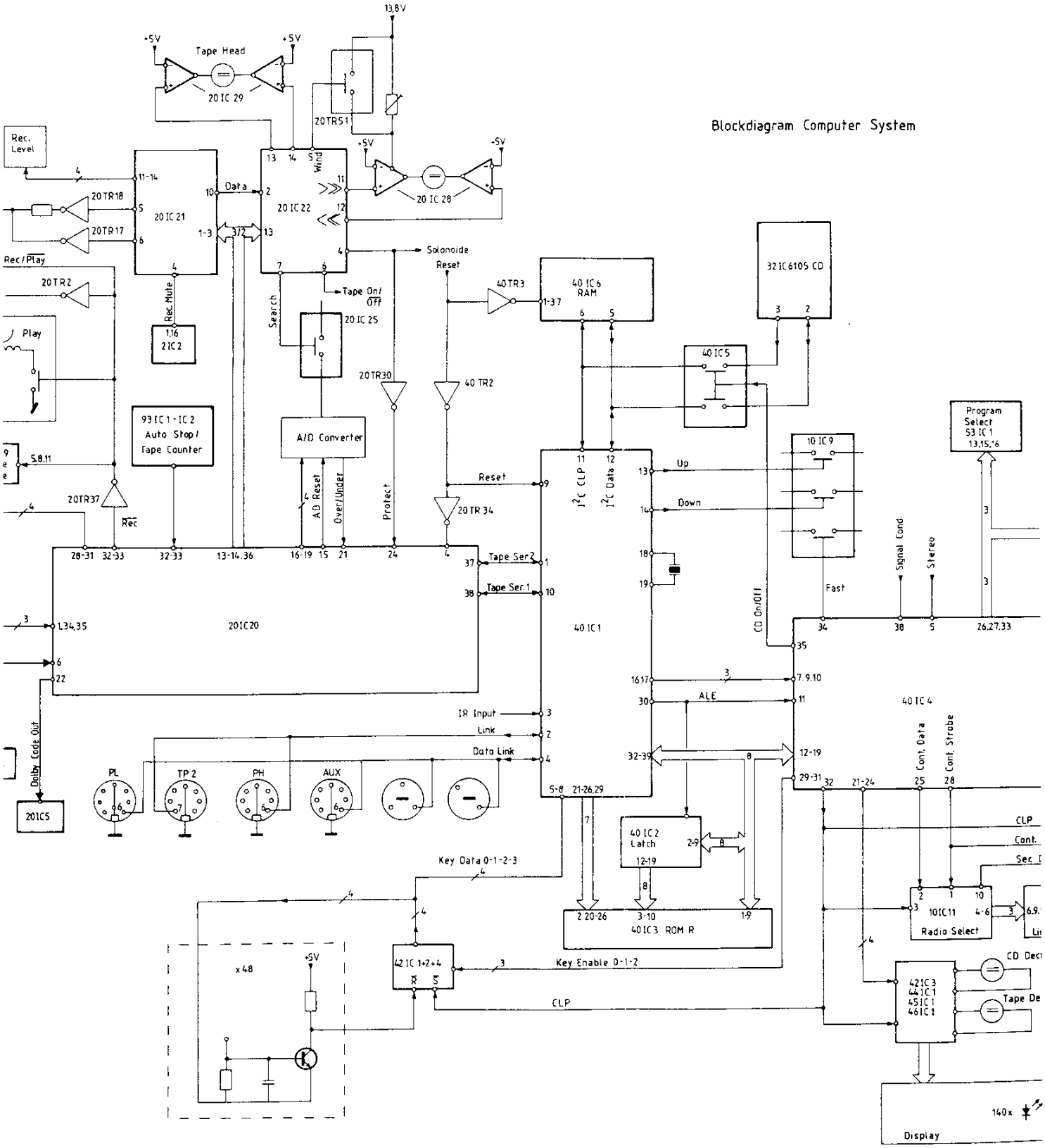
Blockdiagram Computer System
13,8V
+5V
Tape Head
20 IC 29
20TR51
Rec. Level
20TR18
20TR17
20 IC 21
20 IC 22
Data
Wind
20 IC 28
Solonoide
Reset
Rec/Play
20TR2
Play
Rec. Mute
1,16
21C2
Tape On/Off
Search
20 IC 25
40TR3
40 IC6 RAM
32 IC 6105 CD
40 IC5
20TR30
40 TR2
93 IC 1 - IC 2
Auto Stop/
Tape Counter
A/D Converter
10 IC 9
Program Select 53 IC 1
13,15,16
Up
Down
Reset
20TR37
Rec
A/D Reset
Over/Under
Protect
20TR 34
Tape Ser 2
Tape Ser 1
Signal Cond.
Stereo
Fast
CD On/Off
20IC20
40 IC1
40 IC4
IR Input
Link
Data Link
ALE
Cont. Data
Cont. Strobe
Dolby Code Out
20IC5
PL
TP 2
PH
AUX
40 IC2 Latch
CLP
Cont.
Key Data 0-1-2-3
40 IC3 ROM R
10IC11
Radio Select
x 48
42 IC 1+2+4
Key Enable 0-1-2
CLP
42IC3
64IC1
45IC1
46IC1
CD Dec
Tape De
Display
140x

Blockdiagram Computer System

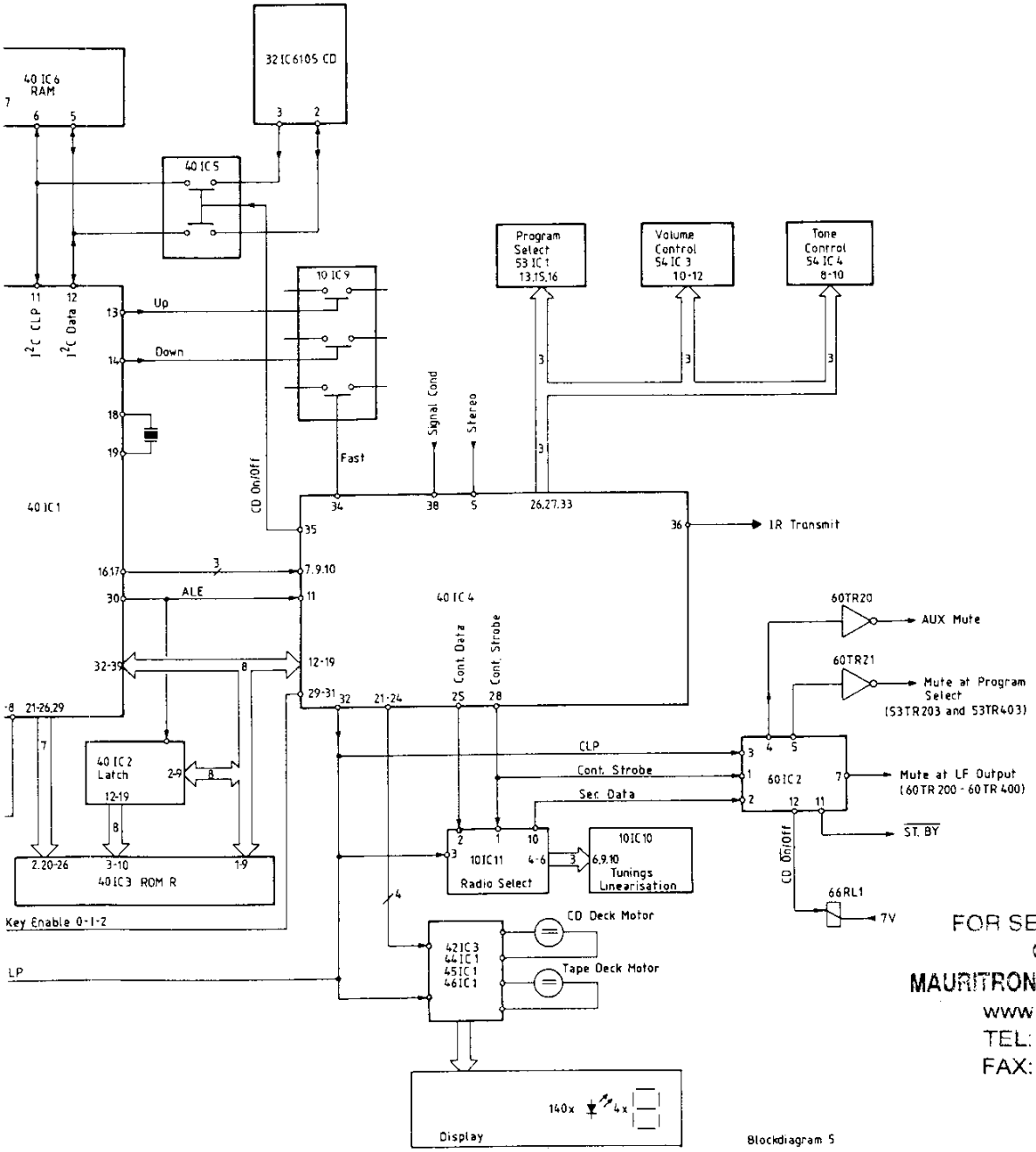

Blockdiagram 5

FOR SERVICE MANUALS
CONTACT:
MAURITRON TECHNICAL SERVICES
www.mauritron.co.uk
TEL: 01844 - 351694
FAX: 01844 - 352554

BLOCK DIAGRAM

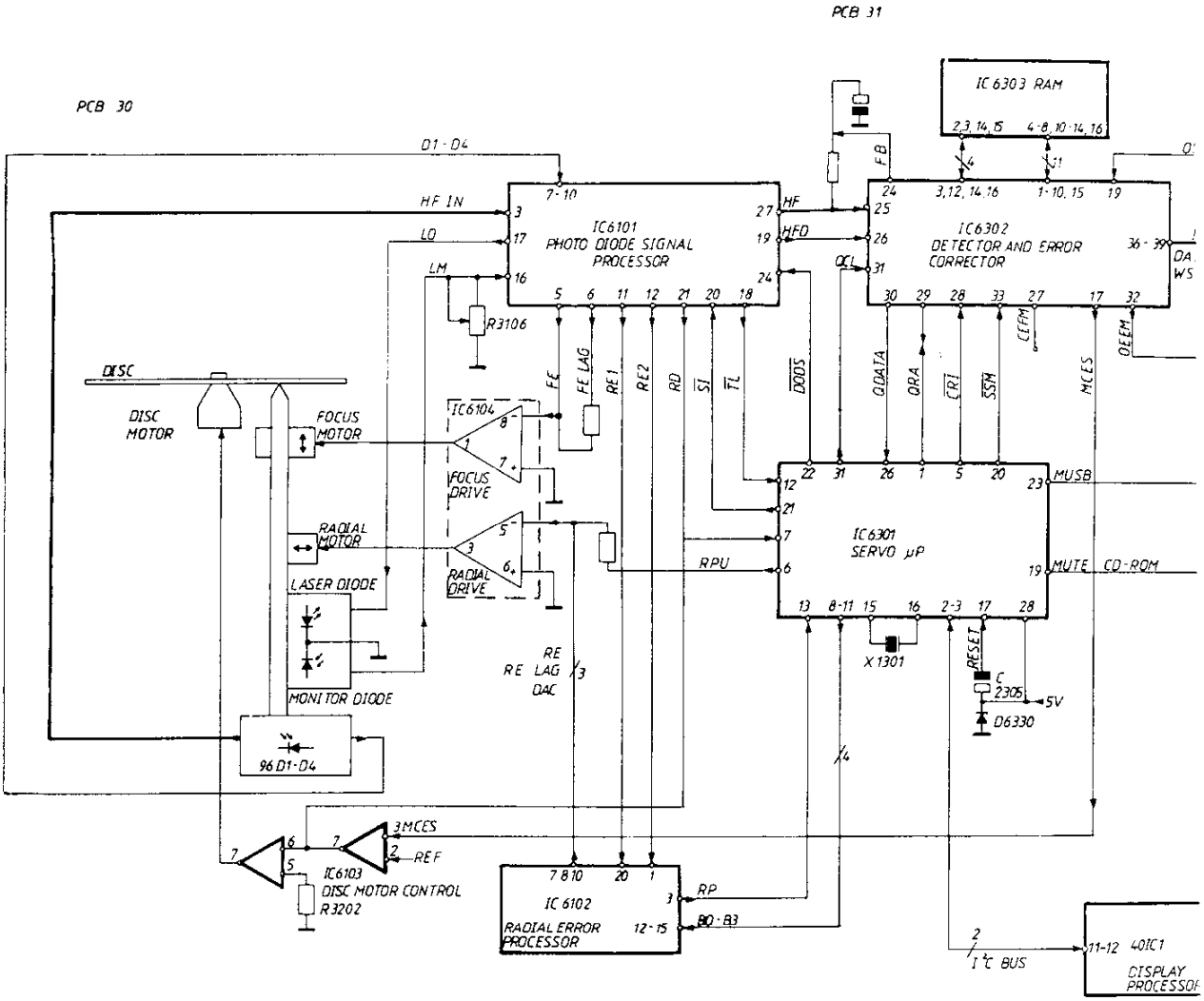

FOR SERVICE MANUALS
CONTACT:
MAURITRON TECHNICAL SERVICES
www.mauritron.co.uk
TEL: 01844 - 351694
FAX: 01844 - 352554

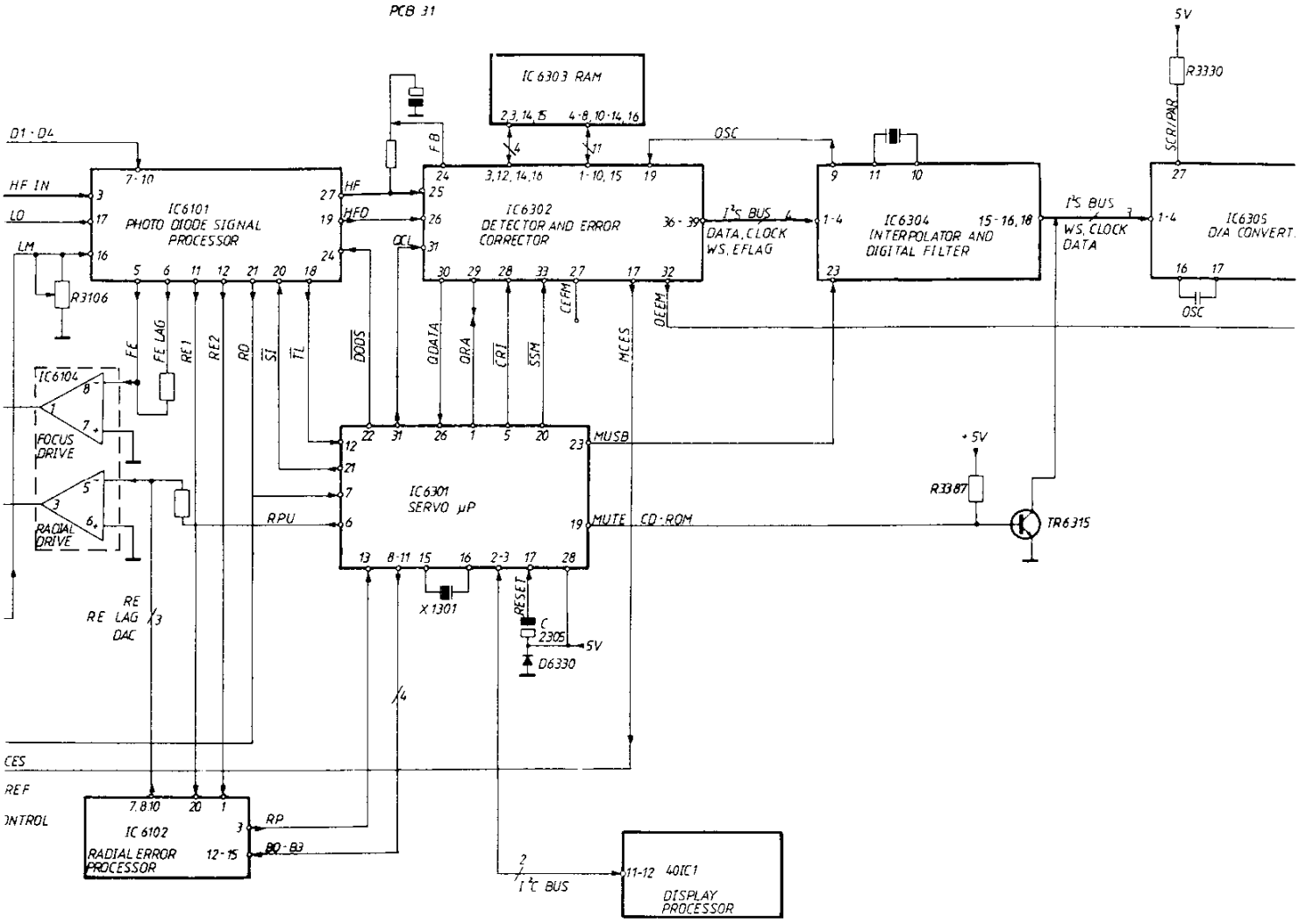
PCB 31
IC 6303 RAM
2,3,14,15
4-8,10-14,16
D1 - D4
HF IN
LO
LM
R3106
IC6101
PHOTO DIODE SIGNAL
PROCESSOR
HF
HFD
F.B
OCL
IC6302
DETECTOR AND ERROR
CORRECTOR
OSC
I²S BUS
DATA, CLOCK
WS, EFLAG
IC6304
INTERPOLATOR AND
DIGITAL FILTER
I²S BUS
WS, CLOCK
DATA
5V
R3330
SCR/PAR
IC6305
D/A CONVERT.
OSC
FE
FE LAG
RE1
RE2
RD
SI
TL
DODS
QDATA
QRA
CRT
SSM
CEFM
MCES
OEFM
IC6104
FOCUS
DRIVE
RADIAL
DRIVE
IC6301
SERVO µP
MUSB
MUTE
CD-ROM
RPU
+5V
R3387
TR6315
X 1301
RESET
C
2305
5V
D6330
RE
RE LAG
DAC
CES
REF
NTROL
IC 6102
RADIAL ERROR
PROCESSOR
RP
B0 - B3
I²C BUS
40IC1
DISPLAY
PROCESSOR

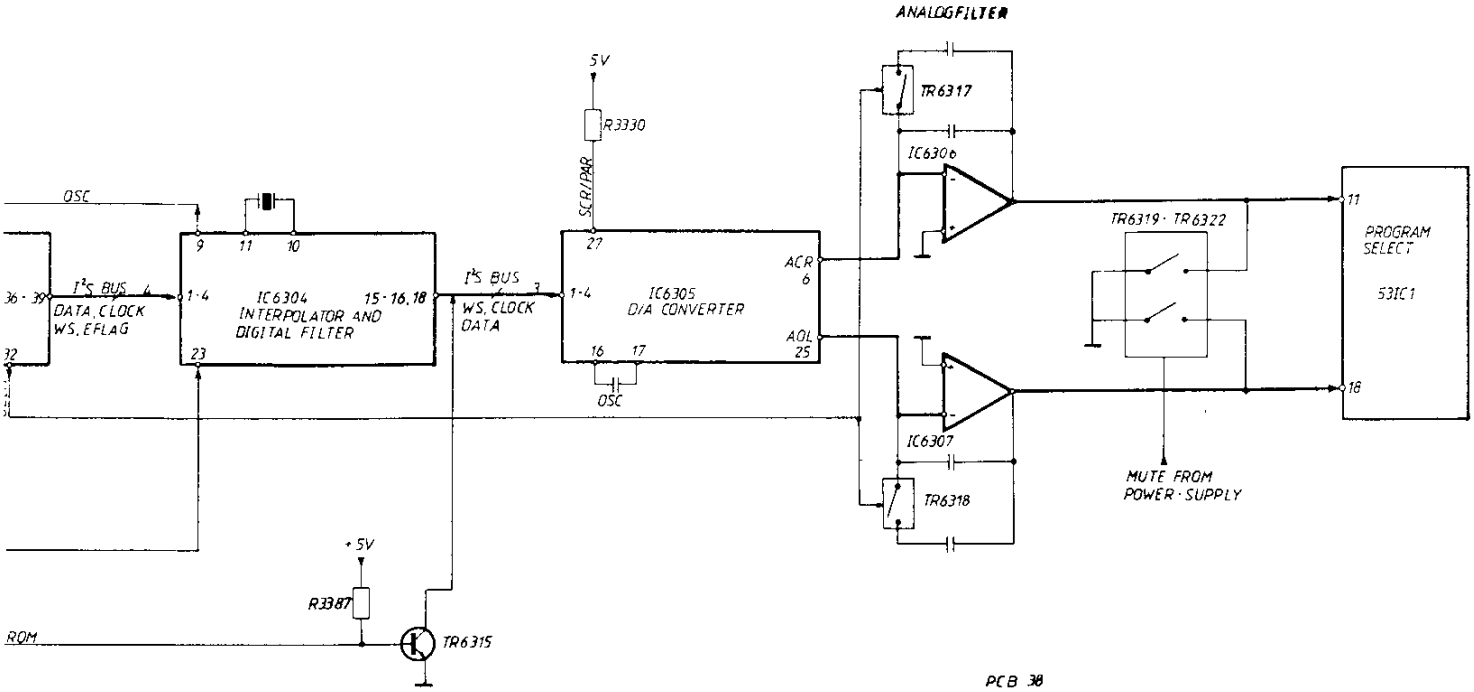

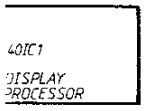

FOR SERVICE MANUALS
CONTACT:
MAURITRON TECHNICAL SERVICES
www.mauritron.co.uk
TEL: 01844 - 351694
FAX: 01844 - 352554

3-1

LIST OF ELECTRICAL PARTS

In the player chip components have been applied. For insertion and removal of chip components see the figure below.

FOR SERVICE MANUALS
CONTACT:
MAURITRON TECHNICAL SERVICES
www.mauritron.co.uk
TEL: 01844 - 351694
FAX: 01844 - 352554

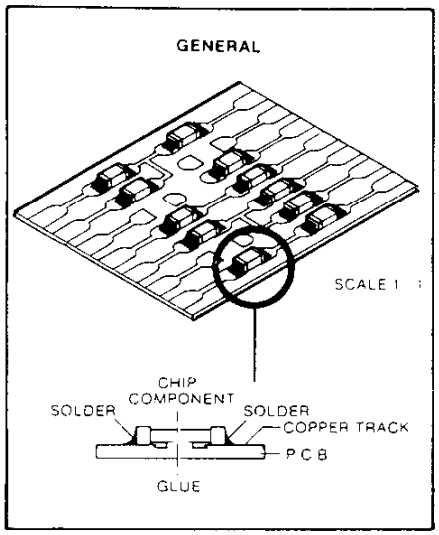

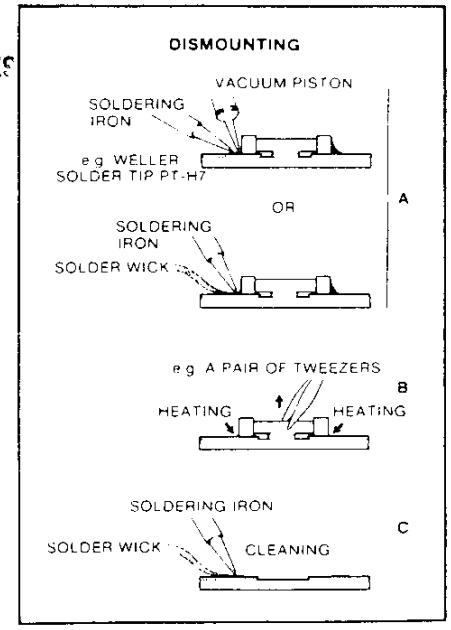

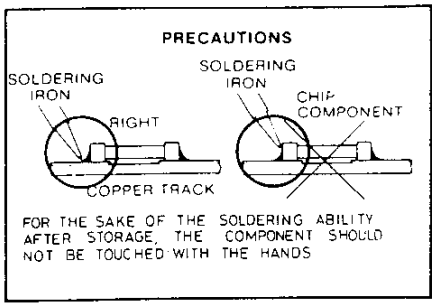

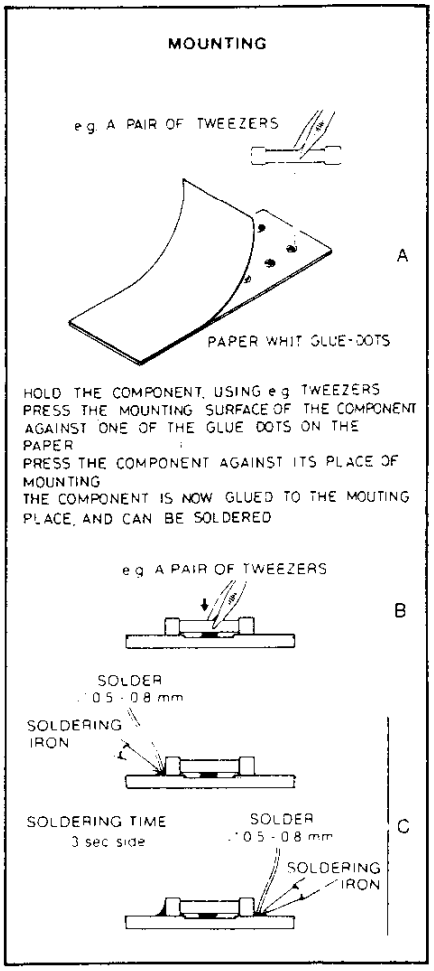

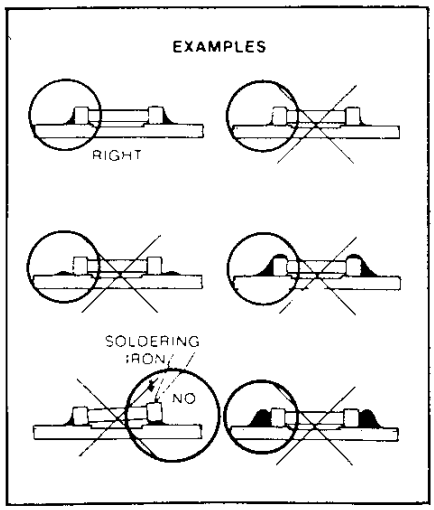

LIST OF ELECTRICAL PARTS

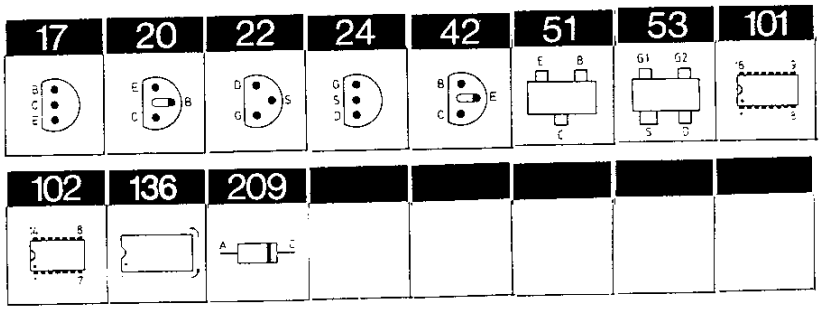

Resistors not referred to are standard, see page 3-14

△ indicates that static electricity may destroy the component.

PCB 10, 8002715
AM/FM, RF, IF Decoder

PCB 10, 8002891
HF Decoder
type 2508, 2510, 2512, 2514

PCB 10, 8002893
HF Decoder
type 2509, 2513

**Only type 2508, 2512*

IC2△	8340756	**136**	LM1865	IC8△	8340763	**136**	OP-AMP BI-FET
IC3△	8340758	**136**	LA3401	IC9△	8340202	**102**	Quad 4066
IC4△	8340492	**102**	SP8629	IC10△	8340602	**101**	4052 4CH
IC5△	8340245	**102**	4011	IC11△	8340782	**136**	4094
IC6△	8341102		74HC4520				
IC7△	8340757	**136**	LA1245				

TR1-TR4	8320625	**42**	BF240	TR14	8320396	**24**	MPF 4392
TR5	8320497	**20**	BC547B	TR15	8320535	**22**	BF256C
TR6	8320509	**20**	BC548B	TR20	8320521	**20**	BC556B
TR7	8320503	**20**	BC557B	TR21	8320497	**20**	BC547B
TR9	8320627	**20**	BC549	TR22	8320521	**20**	BC556B
TR10-TR11	8320503	**20**	BC557B	TR23	8320497	**20**	BC547B
TR12	8320497	**20**	BC547B	TR24	8320640	**17**	BC636
TR13	8320512	**20**	BC338-25	TR25	8320497	**20**	BC547B
				*TR26	8320497	**20**	BC547B
				TR200	8320509	**20**	BC548B

D1	8300058	**209**	1N4148	D8	8300212	**209**	1N4448
D2	8300568	-	SVC333B	D9	8300568	-	SVC333B
D3-D5	8300385	**209**	BA423	D10	8300212	**209**	1N4448
D6	8300058	**209**	1N4148	D11-D14	8300058	**209**	1N4148
D7	8300385	**209**	BA423				

R25	5370326	10.0kΩ 20% 0.1W	R143	5020263	100kΩ 1% 1/4W
R51	5370128	100kΩ 20% 0.1W	R144	5020336	69.8kΩ 1% 1/4W
R73	5370330	220kΩ 20% 0.1W	*R200	5020257	71,5kΩ 1% 1/4W
R141	5020263	100kΩ 1% 1/4W	R204	5370061	47kΩ 20% 0.1W
R142	5020336	69.8kΩ 1% 1/4W	*R204	5370328	47kΩ 20% 0,1W

C2	4010106	10nF 20+80% 40V	C27-C28	4010105	1nF 10% 63V
C3	4010101	4.7nF 10% 63V	C29	4000191	47pF 5% 63V
C4	4010107	22 nF -20+80% 40V	C30	4130230	100nF 5% 63V
C5	4010101	4.7nF 10% 63V	C31	4010103	2.2nF 10% 63V
C6	4010107	22nF -20+80% 40V	C32	4010107	22nF -20+80% 40V
C7-C8	4010101	4.7nF 10% 63V	C33	4130179	100nF 20% 63V
C9	4200512	1μF 20% 50V	C34	4010105	1nF 10% 63V
C10	4200129	10μF 20+50% 16V	C35-C36	4200510	10μF 20% 16V
C11-C12	4010105	1nF 10% 63V	C37	4010118	330pF 10% 63V
C13	4200515	4.7μF 20% 25V	C38	4200510	10μF 20% 16V
C14	4000142	82pF 5% 63V	C39	4030023	47nF -20+80% 16V
C15-C19	4010106	10nF -20+80% 40V	C40	4200523	0.47μF 20% 50V
C20	4200525	22μF 20% 10V	C41-C42	4200512	1μF 20% 50V
C21	4010106	10nF -20+80% 40V	C43	4010106	10nF -20+80% 40V
C22	4010118	330pF 10% 63V	*C44	4010105	1nF 10% 63V
C23	4010106	10nF -20+80% 40V	C45	4200628	100μF 20% 16V
C24	4130070	1μF 10% 50V	C48	4000137	47pF 5% 63V
C25	4010118	330pF 10% 63V	C49-C50	4130230	100nF 20% 63V
*C25	4130230	100nF 20% 63V	C51	4100266	330pF 2.5% 63V
C26	4130230	100nF 20% 63V			

C52	4000150	68pF 5% 63V	C80	4130230	100nF 20% 63V
C53	4000155	56pF 5% 63V	C81	4340003	5.5-65 pF
C54	4100233	150pF 5% 63V	C82	4130230	100nF 20% 63V
C55	4340002	2-22pF	C83	4340002	2-22 pF
C56	4340003	5.5-65 pF	C84	4130233	220nF 20% 63V
C57-	4130230	100nF 20% 63V	C85	4010103	2.2nF 10% 63V
C58			C86	4130233	220nF 20% 63V
C59	4130233	220nF 20% 63V	C87	4010105	1nF 10% 63V
C60	4130235	47nF 20% 63V	C88	4130235	47nF 20% 63V
C61-	4200515	4.7µF 20% 25V	C89-	4010107	22nF -20+80% 40V
C62			C90		
C63	4130235	47nF 20% 63V	C92	4200510	10µF 20% 16V
C64	4200517	2.2µF 20% 50V	C93	4010107	22nF -20+80% 40V
C65	4200129	100µF 20+50% 16V	C94	4010105	1nF 10% 63V
C66	4010106	10nF -20+80% 40V	C96-	4130230	100nF 20% 63V
C67	4130235	47nF 20% 63V	C97		
C68-	4100210	1.5nF 5% 63V	C98	4200483	47µF 20% 16V
C69			C200	4100209	470pF 5% 63V
C70	4000226	68pF 5% 63V	*C200	4100236	1nF 5% 63V
C71	4010107	22nF -20+80% 40V	C201	4200510	10µF 20% 16V
C72	4000137	47pF 5% 63V	C202	4100238	3.3nF 5% 63V
*C72	4010106	10nF -20+80% 40V	C203	4100235	680pF 5% 63V
C73	4130136	1µF 20% 100V	C204	4100261	6.8nF 2.5% 63V
C76	4100247	1.8nF 5% 63V	C205	4100260	2.2nF 2.5% 63V
C77	4010103	2.2nF 10% 63V	C206	4100210	1.5nF 5% 63V
C78	4130230	100nF 20% 63V	C207	4200515	4.7µF 20% 25V
C79	4100210	1.5nF 5% 63V	C208	4130230	100nF 20% 63V
*C79	4100238	3,3nF 5% 63V			

BP1- BP3	8030134	10.7 mHz	BP4	8030056	455 KHz 1kHz

L1	8020552	10µH 10%	L11	8020558	LB SO116
L2	8020568	2.7µH	L12	8020557	MB SO116
L3	8020569	18µH 10%	L13	8020561	SFP/SFR 455H
L4	8020552	10µH 10%	L14	8020562	455 KHz SO116
L5	8022240	19.5 mH 2%	L200	8022239	32 MH 2% 19-38 kHz
L8	8020559	MB SO116	L201	8022239	32 MH 2% 19-38 kHz
L9	8020560	LB SO116			

P4	7220425	Plug 3/3	P7	7210501	75 Ω
P5	7220429	Plug 7/7	P8	7220312	Plug 2pol.
P6	7220428	Plug 6/6			

X1	8030087	456 kHz 1 kHz	X2	8030088	455 kHz

FOR SERVICE MANUALS
CONTACT:
MAURITRON TECHNICAL SERVICES
www.mauritron.co.uk
TEL: 01844 - 351694
FAX: 01844 - 352554

PCB 17, 8050093
FM Tuner

TR1	8320610	**53** BF995	TR3-	8320672	**51** BFS20
TR2	8320766	BF995	TR4		

PCB 17, 8050102
FM Tuner
type 2509, 2513

**Only type 2509, 2513*

D1- D4	8300301	**209** BB204

R32- R34	5370253	47kΩ 20% 0.1W

C1	4000331	6.8pF 0.25pF 50V	C16	4000332	8.2pF 0.5pF 50V
*C1	4000275	15pF 5% 50V	C17-	4000260	5pF 0.5pF 50V
C2	4000257	27pF 5% 50V	C18		
C3-	4010132	1nF 10% 50V	*C18	4000228	12pF 5% 50V
C6			C19-	4010132	1nF 10% 50V
C7	4000257	27pF 5% 50V	C20		
C8	4000332	8.2pF 0.5pF 50V	C21	4000275	15pF 5% 50V
*C8	4000275	15pF 5% 50V	C22	4000228	12pF 5% 50V
C9	4000258	4pF 0.25pF 50V	C23	4010132	1nF 10% 50V
*C9	4000228	12pF 5% 50V	C24	4010157	10nF 10% 50V
C10	4000330	5.6pF 0.5pF 50V	C25	4000294	0.5pF 0.25pF 50V
C12	4010132	1nF 10% 50V	C26	4200512	1µF 20% 50V
C13	4000231	68pF 5% 50V	C27-	4000321	220pF 5% 50V
C14	4010157	10nF 10% 50V	C29		

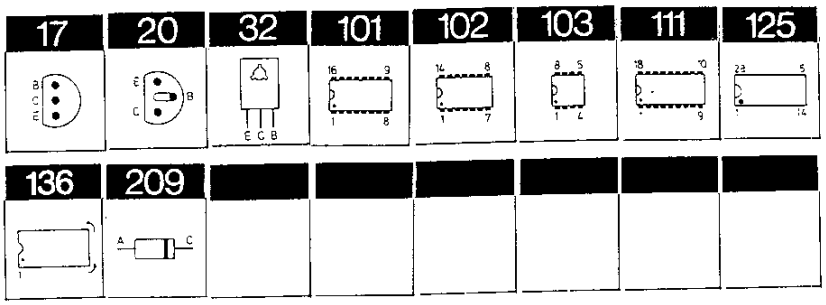

Resistors not referred to are standard, see page 3-14

△ indicates that static electricity may destroy the component.

L1	6850158	Coil 70nH		L6	8020632	Coil 0.68μH 20%	
L2	6850157	Coil 115nH		L7	8020567	Coil 10.7mHz 3.2μH	
L3	8020577	Coil 2.2μH 10%		L8	6850159	Coil 100nH	
L4-L5	6850157	Coil 115nH					

P1	7220129	Plug 2/2		P3	7220210	Plug 4/4	
P2	7220212	Plug 3/3					

PCB 20, 8004628
Tape Recorder

IC1	8340294	**103**	LF353N	IC17△	8340790	**103**	4558
IC2	8340545	**101**	LM13700N	IC20*△	8340848	**136**	8050
IC3-△ IC4	8340202	**102**	Quad 4066	IC21-△ IC22	8340782	**136**	4094
IC5	8340048	**103**	1458	IC23	8340294	**103**	LF353N
IC6	8340752	**111**	μPC1297CA	IC24	8340157	**102**	LM324
IC7-△ IC8	8340202	**102**	Quad 4066	IC25△	8340202	**102**	Quad 4066
IC9△	8340383	**136**	4073	IC26	8340569	**103**	LM358N
IC14-△ IC15	8340202	**102**	Quad 4066	IC27	8340294	**103**	LF353N
IC16	8340157	**102**	LM324	IC28-IC29	8340605	**103**	L272M
				IC200△	8340784	**125**	TEA0665

TR1-TR2	8320503	**20**	BC557B	TR35	8320204	-	BD136
TR3	8320497	**20**	BC547B	TR36-TR37	8320497	**20**	BC547B
TR4-TR5	8320503	**20**	BC557B	TR40	8320497	**20**	BC547B
TR6-TR7	8320497	**20**	BC547B	TR41-TR42	8320503	**20**	BC557B
TR8	8320503	**20**	BC557B	TR43-TR47	8320497	**20**	BC547B
TR9	8320617	**32**	BD137-10	TR50	8320691	**17**	BC369
TR10	8320497	**20**	BC547B	TR51-TR52	8320497	**20**	BC547B
TR11-TR13	8320503	**20**	BC557B	TR53	8320467		BD135
TR16-TR19	8320497	**20**	BC547B	TR54	8320691	**17**	BC369
TR23-TR27	8320497	**20**	BC547B	TR55	8320497	**20**	BC547B
TR30	8320497	**20**	BC547B	TR200	8320524	**20**	BC550B
TR31	8320691	**17**	BC369	TR201	8320557		BC550C
TR32	8320497	**20**	BC547B	TR202	8320497	**20**	BC547B
TR33	8320509	**20**	BC548B	TR204-TR206	8320595	**20**	BC337-40
TR34	8320497	**20**	BC547B	TR209	8320579	**20**	BC549C
				TR213	8320497	**20**	BC547B

D1	8300058	**209**	1N4148	D25-D28	8300058	**209**	1N4148
D2	8300058	**209**	1N4148	D29	8300023	**209**	1N4002
D3-D5	8300058	**209**	1N4148	D30-D32	8300058	**209**	1N4148
D6	8300058	**209**	1N4148	D124	8300058	**209**	1N4148
D8	8300058	**209**	1N4148	D200-D201	8300058	**209**	1N4148
D11	8300326	**209**	11V 5% 0.4W	D204	8300058	**209**	1N4148
D15-D20	8300058	**209**	1N4148				
D21	8300135	**209**	3.3V 5% 0.4W				
D22-D23	8300058	**209**	1N4148				

R27	5020489	10Ω 10% 0.3W
R29	5020214	4,53kΩ 1% 1/4W
R46	5370324	4.7kΩ 20% 0.1W
R48	5370326	10kΩ 20% 0.1W
R86	5370328	47kΩ 20% 0.1W
R88	5370330	220kΩ 20% 0.1W
R89-R90	5020288	1mΩ 1% 1/4W
R139	5370330	220kΩ 20% 0.1W
R156	5020955	715kΩ 1% 1/4W
R185	5370325	2.2kΩ 20% 0.1W
R187	5020195	1.62kΩ 1% 1/4W
R188	5020238	23.7kΩ 1% 1/4W
R189	5020145	8.66kΩ 1% 1/4W
R191	5020343	15.4kΩ 1% 1/4W
R193	5020567	787Ω 1% 1/4W
R196	5020145	8.66kΩ 1% 1/4W
R199	5020773	42.2kΩ 1% 1/4W
R204	5020836	90.9Ω 1% 1/4W
R206	5020782	365Ω 1% 1/4W
R207	5020930	7.15kΩ 1% 1/4W
R227	5370326	10kΩ 20% 0.1W
R228	5020188	1kΩ 1% 1/4W
R230	5020188	1kΩ 1% 1/4W
R237	5370327	22kΩ 20% 0.1W
R240	5370326	10kΩ 20% 0.1W
R243	5370326	10kΩ 20% 0.1W
R260	5370328	47kΩ 20% 0.1W
R261	5370325	2.2kΩ 20% 0.1W
R266	5020835	1.37kΩ 1% 1/4W
R270	5020083	33.2kΩ 1% 1/4W
R272-R273	5020294	82.5kΩ 1% 1/4W
R274	5020568	2.21kΩ 1% 1/4W
R276	5020763	5.11kΩ 1% 1/4W
R283	5020152	9.09kΩ 1% 1/4W
R284	5020343	15.4kΩ 1% 1/4W
R285	5020593	12.7kΩ 1% 1/4W
R286	5020565	8.25kΩ 1% 1/4W
R288	5020139	12.1kΩ 1% 1/4W
R289	5020766	46.4kΩ 1% 1/4W
R290	5020767	21.5kΩ 1% 1/4W
R291	5020212	4.02kΩ 1% 1/4W
R302	5020110	10kΩ 1% 1/4W
R305	5020195	1.62kΩ 1% 1/4W
R314	5370324	4.7kΩ 20% 0.1W

C1	4200631	0.22μF 20% 50V
C2	4200512	1μF 20% 50V
C3	4010103	2.2nF 10% 63V
C4	4200512	1μF 20% 50V
C5	4100231	10nF 2,5% 63V
C6	4130308	220nF 10% 63V
C7	4200561	10μF 20% 50V
C8	4200396	220μF -20+50% 16V
C9	4200517	2.2μF 20% 50V
C10	4130307	150nF 10% 63V
C11	4130304	22nF 10% 63V
C12	4200600	470μF 20% 16V
C13	4200544	22μF 20% 16V
C14	4200628	100μF 20% 16V
C15	4200510	10μF 20% 16V
C16	4000163	10pF 5% 63V
C20	4200516	47μF 20% 16V
C21	4200600	470μF 20% 16V
C25	4130305	33nF 10% 63V
C26	4130305	33nF 10% 63V
C27-C28	4200517	2.2μF 20% 50V
C29	4130315	15nF 5% 63V
C30	4130334	1μF 5% 63V
C31	4100263	270pF 1% 63V
C32	4200517	2.2μF 20% 50V
C33	4130311	680nF 10% 63V
C34	4130307	150nF 10% 63V
C35	4200517	2.2μF 20% 50V
C36	4010035	1nF 10% 63V
C37	4130305	33nF 10% 63V
C38	4130331	47nF 5% 63V
C42	4010035	1nF 10% 63V
C44	4200511	100μF 20% 10V
C45	4030027	100nF 20% 25V
C46-C49	4010035	1nF 10% 63V
C50	4010105	1nF 10% 63V
C51-C55	4010035	1nF 10% 63V
C56	4000163	10pF 5% 63V
C57	4000136	22pF 5% 63V
C58-C61	4010035	1nF 10% 63V
C62	4200631	0.22μF 20% 50V
C63-C64	4010035	1nF 10% 63V
C65	4130265	10nF 10% 63V
C67-C68	4010184	330pF 10% 63V
C69	4010035	1nF 10% 63V
C70-C71	4010105	1nF 10% 63V
C72-C75	4010035	1nF 10% 63v
C76	4010184	330pF 10% 63V
C77	4000163	10pF 5% 63V
C78-C81	4130308	220nF 10% 63V
C200	4200525	22μF 20% 10V
C201	4010161	560pF 10% 63V
C202	4200517	2.2μF 20% 50V
C203	4000165	220pF 5% 63V
C204	4130315	15nF 5% 63V
C205	4130306	100nF 10% 63V
C206	4200625	3.3μF 20% 50V
C208	4130268	10nF 5% 63V
C209	4010105	1nF 10% 63V
C214	4130234	470nF 10% 63V
C215	4100241	6.8nF 5% 63V
C216	4130265	10nF 10% 63V
C217	4130315	15nF 5% 63V
C218	4130305	33nF 10% 63V
C219	4130308	220nF 10% 63V
C220	4200525	22μF 20% 10V
C221	4200511	100μF 20% 10V
C222	4200517	2.2μF 20% 50V
C223	4010164	820pF 10% 63V
C224	4100246	270pF 5% 63V
C225	4130265	10nF 10% 63V
C229	4130265	10nF 10% 63V
C230	4130304	22nF 10% 63V
C231	4130240	47nF 10% 63V
C232	4100255	560pF 5% 63V
C233	4100232	100pF 5% 63V
C234	4100255	560pF 5% 63V
C238	4010109	180pF 10% 63V
C239	4200515	4.7μF 20% 25V
C240	4200510	10μF 20% 16V
C241-C242	4130333	220nF 5% 63V
C243	4200510	10μF 20% 16V
C244	4010103	2.2nF 10% 63V
C245	4100246	270pF 5% 63V
C246	4100240	5.6nF 5% 63V
C247	4100247	1.8nF 5% 63V
C248	4200510	10μF 20% 16V
C249	4100258	4.7nF 2% 63V
C250	4200510	10μF 20% 16V
C251	4130331	47nF 5% 63V
C252	4200631	0.22μF 20% 50V
C253	4200630	0.68μF 20% 50V

FOR SERVICE MANUALS
CONTACT:
MAURITRON TECHNICAL SERVICES
www.mauritron.co.uk
TEL: 01844 - 351694
FAX: 01844 - 352554

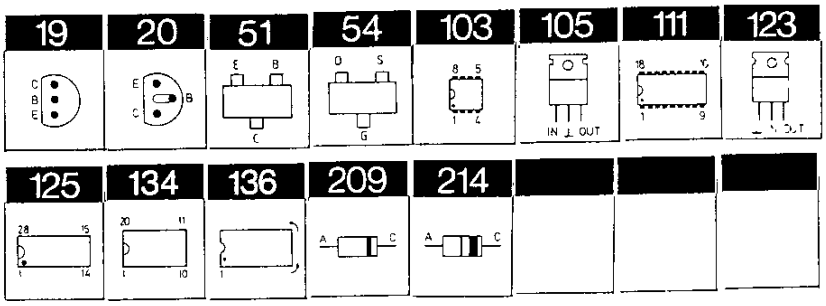

Resistors not referred to are standard, see page 3-14

△ indicates that static electricity may destroy the component.

C254	4200510	10μF 20% 16V	C259	4100258	47nF 2% 63V
C255	4130331	47nF 5% 63V	C265-C266	4130306	100nF 10% 63V
C256	4200631	0.22μF 20% 50V			
C257	4200630	0.68μF 20% 50V	C269	4130267	18nF 5% 63V
C258	4100231	10nF 2.5% 63V			

L1	8020556	Coil 2.4mH	L201	8022237	Coil 10mH
L2	8020659	Coil 10μH	L202	8022251	Coil 5mH
L3	8020637	Coil 10μH 10%	L205	8022237	Coil 10mH
L200	8022252	Coil 3mH	L206	8022236	Coil 36mH

P30	7220414	Plug 5/5	P37-P39	7220122	Plug 4/3
P31	7220416	Plug 7/7			
P32	7220418	Plug 9/9	P46	7220122	Plug 4/3
P33	7220416	Plug 7/7	P47	7220160	Plug 5/4
P34	7220418	Plug 9/9	P48-P49	7220122	Plug 4/3
P35	7220412	Plug 3/3			
P36	7220319	Plug 8/8	P130	7220122	Plug 4/3

X1	8090005	Crystal 8.8672 mHz

PCB 21, 8002732
Connection Board

P40	7220430	Plug 8/8	P43	7220318	Plug 6pol.
P41	7220428	Plug 6/6	P44	7220313	Plug 3pol.
P42	7220465	Plug 16pol.	P45	7220418	Plug 9/9

PCB 30, 8005264
Servo

IC6101△	8340991	**125**	TDA 5708 C3	IC6103	8340993	**103** NJM 4560D
IC6102△	8340992	**134**	TDA 5709	IC6104	8340683	**103** L 272BH

TR6108	8320721	**020**	BC 338-16	TR6112	8320616	**051** BC 858B
TR6109	8320615	**051**	BC 848B			

D6107	8300058	**209**	1N 4148	D6118-6119	8300570	**209** HZ 7C2 7V5
D6110-6111	8300058	**209**	1N 4148			

R3101	5020966	12Ω 5% 1/3W	R3146	5370254	22kΩ 20% 0.1W
R3104	5020967	18Ω 5% 1/3W	R3155	5011240	8.2kΩ 2% 1/8W
R3106	5370058	47 kΩ 20% 0.1W	R3159	5010053	15kΩ 5% 1/4W
R3107-R3108	5020965	4.7Ω 2% 1/3W	R3160	5020971	4.7Ω 1% 1/4W
			R3162	5011255	91kΩ 2% 1/8W
R3138	5020964	1.0Ω 2% 1/3W	R3163	5010468	15Ω 5% 1/4W
R3140	5020964	1.0Ω 2% 1/3W	R3207	5020263	100kΩ 1% 1/4W
R3141	5011587	160kΩ 2%	R3208	5020969	47kΩ 1% 1/4W
R3143	5011655	22Ω	R3210-R3211	5020964	1.0Ω 2% 1/3W
R3145	5011704	680kΩ 2% 1/8W			

C2101	4000255	22 nF 10% 50V	C2139	4000255	22 nF 10% 50V
C2102	4000249	470 pF 5% 50V	C2140	4200745	220µF 16V
C2103	4200414	33µF -10+50% 16V	C2141	4130405	470 nF 50V
C2104	4200482	47µF 20% 10V	C2142	4000256	100 nF 10% 50V
C2105-C2106	4000255	22 nF 10% 50V	C2143	4100283	1.2 nF 2% 250V
			C2150-C2151	4130424	3.6 nF 160V 1%
C2107	4200482	47µF 20% 10V			
C2108	4000254	10 nF 10% 50V	C2152	4130206	220 nF 10% 100V
C2109	4130379	270 nF 5% 63V	C2153	4130314	180 nF 10% 63V
C2110	4000253	5.6 nF 10% 50V	C2154	4130206	220 nF 10% 100V
C2111	4130405	470 nF 10% 50V	C2155	4130405	470 nF 10% 50V
C2112	4130406	150 nF 5% 50V	C2156	4130338	6.8 nF 5% 100V
C2113	4000248	100 pF 5% 50V	C2159	4200746	1.5µF 50V Bipolar
C2114	4000233	220 pF 5% 50V	C2160	4010173	4.7 nF 10% 50V
C2117	4010173	4.7 nF 10% 50V	C2200	4010173	4.7 nF 10% 50V
C2135	4130370	4.7 nF 5%	C2202	4130405	470 nF 10% 50V
C2136	4130405	470 nF 10% 50V	C2203	4130221	18 nF 5% 63V
C2137	4000255	22 nF 10% 50V	C2204-C2205	4000255	22 nF 10% 50V
C2138	4200745	220µF 16V			

P31	7210614	Socket, 14 pol.	P34	7220657	Plug, 14 pole
P33	7220652	Plug, 5 pole	P36	7220651	Plug, 4 pole

To P5	6275746	Wire w/sockets 5/5 pin	To P6	6275745	Wire w/sockets 14/14 pin

PCB 31, 8005214
CD Decoder

IC6301Δ	8340914	**125**	MAB8441 P'T	IC6308	8340208	**105**	MC 78M 15CT
IC6302Δ	8340841	**136**	SAA 7210	IC6309	8341029	**105**	TY 40408 5V
IC6303Δ	8340927	**111**	UPD 41416 C-20	IC6310	8340931	**123**	MC 7906 CT
				IC6311	8340222	**123**	MC 79M15 CT
IC6304Δ	8340855	**136**	SAA 7220				
IC6305Δ	8340913	**136**	TDA 1541'N5				
IC6306-IC6307	8340930	103	LM 833				

FOR SERVICE MANUALS
CONTACT:
MAURITRON TECHNICAL SERVICES
www.mauritron.co.uk
TEL: 01844 - 351694
FAX: 01844 - 352554

TR6314	8320729	**51**	BC 818-16	TR6323	8320108	**20**	BC 548B
TR6315	8320725	**51**	BC 818-25	TR6324	8320615	**51**	BC 848B
TR6316	8320616	**51**	BC 858B	TR6325	8320616	**51**	BC 858B
TR6317-TR6318	8320724	**54**	BSR 56	TR6328	8320730	**19**	BC 328-16
				TR6348	8320620	**51**	BF 550
TR6319-TR6322	8320725	**51**	BC 818-25	TR6350	8320615	**51**	BC 848B

D6330	8300058	**209**	1N 4148	D6342-D6345	8300023	**209**	1N 4002
D6331-D6332	8300245	**214**	BAX 18				
				D6346-D6347	8300245	**214**	BAX 18
D6333-D6335	8300058	**209**	1N 4148				
				D6353	8300245	**214**	BAX 18
D6336	8300404	**209**	HZ 4B2	D6356	8300309	**209**	HZ 5B1 4V7
D6340-D6341	8300245	**214**	BAX 18	D6360	8300058	**209**	1N 4148

R3301	5020989	2.2Ω 5% 1/3W	R3348-R3349	5020862	1.0kΩ 1% 1/4W
R3321	5020965	4.7Ω 2% 1/3W			
R3326	5020964	1.0Ω 2% 1/3W	R3350-R3351	5020990	1.8kΩ 1% 1/2W
R3330	5020965	4.7Ω 2% 1/3W			
R3331-R3332	5020983	10Ω 5% 1/3W	R3352-R3353	5020991	100Ω 5% 1/3W
R3333	5020984	22kΩ 5% 1/3W	R3354	5020901	2.4kΩ 1% 1/4W
R3335	5020985	150kΩ 5% 1/3W	R3357	5020901	2.4kΩ 1% 1/4W
R3336	5011551	16kΩ 2% 1/8W	R3358-R3359	5020991	100Ω 5% 1/3W
R3340	5011328	4.7MΩ 10% 1/8W			
R3341	5020055	4.7MΩ 5% 1W	R3370	5011514	3.9kΩ 5% 1/8W
R3346-R3347	5011328	4.7MΩ 10% 1/8W	R3377	5011514	3.9kΩ 5% 1/8W
			R3378	5011268	5.6MΩ 10% 1/8W

Bang & Olufsen

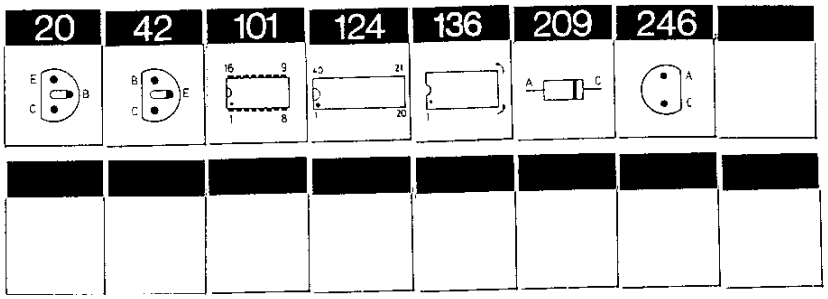

Resistors not referred to are standard. see page 3-14

Δ indicates that static electricity may destroy the component.

FOR SERVICE MANUALS
CONTACT:
MAURITRON TECHNICAL SERVICES
www.mauritron.co.uk
TEL: 01844 - 351694
FAX: 01844 - 352554

C2301-C2302	4000139	33 pF 5% 63V
C2303	4200513	47µF -10+50% 25V
C2304	4010113	22 nF 30% 25V
C2305	4201035	2.2µF -10+50% 63V
C2306	4000234	47 pF 5% 50V
C2308	4010197	1.8 nF 10% 50V
C2309	4200380	1µF -20+50% 63V
C2311	4200625	3.3µF 20% 50V
C2312	4200513	47µF -10+50% 25V
C2313	4010113	22 nF 30% 25V
C2314	4010192	47 nF 10% 50V
C2315	4200513	47µF -10+50% 25V
C2316	4010113	22 nF 30% 25V
C2319	4200380	1µF -20+50% 63V
C2320-C2321	4000234	47 pF 5% 50V
C2322	4010113	22 nF 30% 25V
C2323	4200513	47µF -10+50% 25V
C2324	4000326	680 pF 5% 50V
C2325	4200513	47µF -10+50% 25V
C2326	4010192	47 nF 10% 50V
C2328	4000287	220 nF -20+80% 25V
C2341	4000287	220 nF -20+80% 25V
C2342-C2343	4010192	47 nF 10% 50V
C2344-C2345	4200513	47µF -10+50% 25V
C2350-C2351	4100059	4.7 nF 2.5% 63V
C2352-C2353	4130282	15 nF 2% 63V
C2354-C2355	4130412	2.0 nF 2% 160V
C2358-C2359	4200513	47µF -10+50% 25V
C2360-C2361	4130408	2.0 nF 2% 160V
C2362-C2363	4130413	1.0 nF 2% 250V
C2364-C2365	4200513	47µF -10+50% 25V
C2366-C2367	4200511	100µF 20% 10V
C2375-C2376	4010192	47 nF 10% 50V
C2377	4200359	220µF -10+100% 63V
C2378	4010166	100 nF -20+80% 50V
C2379	4000287	220 nF -20+80% 25V
C2385	4010192	47 nF 10% 50V
C2392	4010192	47 nF 10% 50V
C2395	4200368	100µF -10+100% 63V
C2396	4200751	4700µF 20% 16V
C2397	4200312	1000µF -10+100% 16V
C2398	4200359	220µF -10+100% 63V
C2400	4200513	47µF -10+50% 25V
C2403	4200513	47µF -10+50% 25V
C2404	4010166	100 nF -20+80% 50V

L5301	6850201	470µH	L5302	6850201	470µH
L5304	6850204	2.2µH			

X1301	8090009	6.0 MHz	X1302	8090058	11.2896 MHz

PCB 40, 8001130 type 2506
8001211 type 2511
System Control and IR.

*See page 3-14

IC1Δ	8341069		8032	IC4Δ	8340778	**136**	8155
IC2Δ	8340777	**136**	74HCT573	IC5Δ	8340953	**136**	74HC4066
IC3	8341270		Type 9500	* IC6Δ	8341105		PCF8583
IC3	8341321		Type 8500				

TR1	8320497	**20**	BC547B	TR9	8320497	**20**	BC547B
TR2	8320503	**20**	BC557B	TR10	8320503	**20**	BC557B
TR3	8320497	**20**	BC547B	TR11	8320625	**42**	BF240
TR7	8320627	**20**	BC 549B	TR12-TR14	8320497	**20**	BC547B
TR8	8320625	**42**	BF240				

D1	8300058	**209**	1N4148	D10-D13	8300058	**209**	1N4148
D3-D5	8300058	**209**	1N4148	D14-D15	8300058	**209**	1N4148
D6	8300029	**209**	12v 5% 0.4W	D16	8300058	**209**	1N4148
D8	8300056	**209**					

C1-	4010164	820pF 10% 63V	C42	4010103	2.2nF 10% 63V
C4			C43	4010128	470pF 10% 63V
C5	4010105	1nF 10% 63V	C44	4030230	100nF 20% 63V
C9-	4010105	1nF 10% 63V	C45	4000137	47pF 5% 63V
C14			C46	4010128	470pF 10% 63V
C15	4000139	100pF 5% 63V	C47	4000137	47pF 5% 63V
C16	4010105	1nF 10% 63V	C48	4130303	15nF 10% 63V
C17	4000139	100pF 5% 63V	C49	4010128	470pF 10% 63V
C20	4200600	470µF 20% 16V	C51	4200330	100µF -10+50% 10V
C21	4010105	1nF 10% 63V	C53-	4010105	1nF 10% 63V
C23	4200330	100µF -10+50% 10V	C57		
C24-	4010105	1nF 10% 63V	C59	4030027	100nF 20% 25V
C25			C60-	4010105	1nF 10% 63V
C27	4030027	100nF 20% 25V	C63		
C28	4000134	10pF 5% 63V	C64	4000204	100pF 5% 63V
C30-	4000136	22pF 5% 63V	C65-	4010105	1nF 10% 63V
C31			C66		
C32	4030027	100nF 20% 25V	C69-	4010105	1nF 10% 63V
C33-			C72		
C36	4010128	470pF 10% 63V	C73-	4010118	330pF 10% 63V
C37	4030230	100nF 20% 63V	C75		
C38	4010128	470pF 10% 63V	C76-	4010105	1nF 10% 63V
C39	4000137	47pF 5% 63V	C78		
C40	4000139	100pF 5% 63V	C79	4130230	100nF 20% 63V
C41	4130313	470nF 20% 63V	C80	4030027	100nF 20% 25V

L1-	8020752	Coil 10µH	L12		
L4			L13-	8020753	Coil 4.7µH
L8	8020342	Coil 10µH	L14		
L11-	8020754	Coil 4.7µH			

P	7200056	Socket 28 pol.	P54	7220849	Plug 4/4
P50	7220851	Plug 8/8	P55	7220852	Plug 11/11
P51	7220848	Plug 3/3	P56	7220589	Plug 8 pol.
P52	7220550	Plug 12 pol.	P57	7220850	Plug 6/6

BP1	8030056	455 KHz 1kHz

X1	8090104	Crystal 11.0592mHz	X3	8090078	Crystal 32.768kHz
	8700027	Lithium battery			
	*	(See page 3-14)			

PCB 41, 8002745
Key Board Left

TR1-	8320625	**42**	BF240	TR11	8320503	**20**	BC557B
TR10							

D1-	8330151	**246**	Led Green	D3-	8330152	**246**	Led red
D2				D8			

C1-	4000143	8.2pF 0.25pF 63V	C6		
C2			C7	4000149	12pF 5% 63V
C3-	4000144	10pF 0.25pF 63V	C8-	4000144	10pF 0.25pF 63V
C4			C9		
C5-	4000143	8.2pF 0.25pF 63V	C10	4000149	12pF 5% 63V

P59	7220551	Plug 14 pol.

PCB 42, 8002750
Key Board Middle

IC1-Δ	8340780	**101**	4044	IC3Δ	8340467	**124**	MM5450N
IC2				IC4Δ	8340780	**101**	4044

TR1	8320625	**42**	BF240	TR21-	8320625	**42**	BF240
TR3-	8320625	**42**	BF240	TR25			
TR19							

20	42	103	124	209	246		
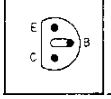	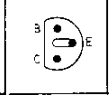	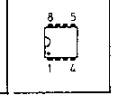	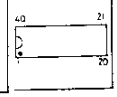	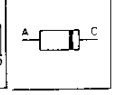	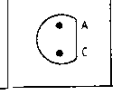		

Resistors not referred to are standard, see page 3-14

Δ indicates that static electricity may destroy the component.

D1-D5	8300058	**209** 1N4148	D39		
D10-	8330152	**246** Led red	D41-D46	8330152	**246** Led red

R39	5370254	22kΩ 20% 0.1W

C7	4000144	10pF 63V	C23-C24	4000143	8.2pF 0.25pF 63V
C8-C9	4000143	8.2pF 0.25pF 63V	C27-C28	4000143	8.2pF 0.25pF 63V
C10	4000149	12pF 5% 63V	C29	4000149	12pF 5% 63V
C11	4000144	10pF 0.25pF 63V	C30	4000143	8.2pF 0.25pF 63V
C12	4000143	8.2pF 0.25pF 63V	C31	4010142	10nF 20+80% 40V
C13	4000149	12pF 5% 63V	C39	4000149	12pF 5% 63V
C14	4000143	8.2pF 0.25pF 63V	C40-C41	4130230	100nF 20% 63V
C15-C16	4000144	10pF 0.25pF 63V	C42-C44	4010118	330pF 10% 63V
C17-C18	4000149	12pF 5% 63V	C45-C49	4010109	180pF 10% 63V
C19-C21	4000143	8.2pF 0.25pF 63V			
C22	4000149	12pF 5% 63V			

P61	7220551	Plug 14 pol.	P63	7220550	Plug 12 pol.
P62	7220552	Plug 18 pol.			

FOR SERVICE MANUALS
CONTACT:
MAURITRON TECHNICAL SERVICES
www.mauritron.co.uk
TEL: 01844 - 351694
FAX: 01844 - 352554

PCB 43, 8002755
Key Board Right

TR1-TR14	8320625	**42** BF240

D1-D4	8300058	**209** 1N4148	D5-D17	8330152	**246** Led red

C1	4000144	10pF 63V	C6-C8	4000143	8.2pF 0.25pF 63V
C2-C3	4000143	8.2pF 0.25pF 63V	C9-C14	4000144	10pF 0.25pF 63V
C4-C5	4000149	12pF 5% 63V			

P	7220129	Plug 2/2	P60	7220552	Plug 18 pol

PCB 44, 8002738
Display Left

IC1Δ	8340467	**124** MM5450N

D1-D16	8330152	**246** Led red	D41		
D17-D18	8330151	**246** Led green	D42-D43	8330152	**246** Led red
D19-D26	8330152	**246** Led red	D46-D64	8330152	**246** Led red
D27-	8330151	**246** Led green	D65	8300594	- 1N4002

	R1	5370254	22kΩ 20% 0.1W				
	C1	4130230	100nF 20% 63V	C2	4010142	10nF 20+80% 40V	
	P64	7220549	Plug 10 pol.	P65	7220551	Plug 14 pol.	
PCB 45, 8002740 **Display Right**	IC1Δ IC2- IC3	8340467 8340605	**124** MM5450N **103** L272M				
	D1- D24	8330152	**246** Led red	D26	8300023	**209** 1N4002	
	R1- R2	5370254	22kΩ 20% 0.1W				
	C1 C2- C3	4130230 4010142	100nF 20% 63V 10nF 20+80% 40V	C4- C5 C8	4130230 4130230	100nF 20% 63V 100nF 20% 63V	
	P66 P67	7220549 7220551	Plug 10 pol. Plug 14 pol.	P68	7220317	Plug 4/4	
PCB 46, 8002736 **7 Segment Display**	IC1Δ	8340467	**124** MM5450N				
	D2- D3	8300023	**209** 1N4002				
	DP1- DP5	8330131	7SEGM red				
	P1	7220604	Plug 8/8				
PCB 51, 8002757 **Headphone**	C200	4010106	10nF -20+80% 40V				
	P77	7210391	Jack socket	P78	7220426	Plug 4/4	
PCB 52, 8002734 **Mic. Ampl.**	TR1 TR2 TR3	8320627 8320497 8320595	**20** BC549B **20** BC547B **20** BC337-40	TR4 TR5 TR6	8320497 8320503 8320497	**20** BC547B **20** BC557B **20** BC547B	
	D1	8300058	**209** 1N4148				
	C1 C3 C4 C5 C7	4010111 4200512 4010111 4200561 4000139	3.3nF 10% 63V 1nF 20% 50V 3.3nF 10% 63V 10µF 20% 50V 100pF 5% 63V	C9 C10 C11 C12 C13	4010111 4200551 4200512 4010106 4010107	3.3nF 10% 63V 33µF 20% 16V 1µF 20% 50V 10nF -20+80% 40V 22nF -20+80% 40V	
	P73	7220426	Plug 4/4	P76	7210391	Jack socket	

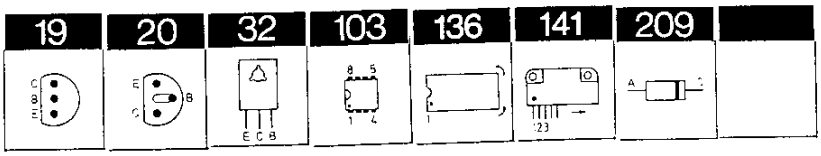

Resistors not referred to are standard, see page 3-14

Δ indicates that static electricity may destroy the component.

PCB 53, 8001252
Input Select

IC1Δ	8340759	**136**	TC9164	IC2Δ	8340763	**136**	BI-FET
TR1	8320497	**20**	BC547B	TR201	8320579	**20**	BC549C
TR7	8320497	**20**	BC547B	TR202	8320524	**20**	BC550B
TR200	8320525	**19**	MPSA16 40V	TR203	8320525	**19**	MPSA16 40V
D1	8300058	**209**	1N4148				
R10	5020489	10Ω 10% 0.3W		R212	5020019	36.5kΩ 1% 1/4W	
C1	4010101	4.7nF 10% 63V		C206	4200512	1μF 20% 50V	
C2	4201087	47μF 10+100% 40V		C207	4130268	10nF 5% 63V	
C3	4000135	150pF 5% 63V		C210	4200512	1μF 20% 50V	
C4-C5	4200509	33μF 20% 25V		C211	4000135	150pF 5% 63V	
				C212	4200512	1μF 20% 50V	
C6	4130193	22nF 20% 63V		C213	4000135	150pF 5% 63V	
C200	4200517	2.2μF 20% 50V		C214	4010128	470pF 10% 63V	
C201	4010036	2.7nF 10% 63V		C215	4010111	3.3nF 10% 63V	
C202	4130306	100nF 10% 63V		C216-C217	4000135	150pF 5% 63V	
C203-C204	4000135	150pF 5% 63V		C220	4000137	47pF 5% 63V	
C205	4010167	2.7nF 10% 100V					
P70	7220433	Plug 11/11		P72	7220313	Plug 3pol	
P71	7220476	Plug 12/12		P75	7220426	Plug 4/4	

FOR SERVICE MANUALS
CONTACT:
MAURITRON TECHNICAL SERVICES
www.mauritron.co.uk
TEL: 01844 - 351694
FAX: 01844 - 352554

PCB 54, 8001253
Volume and Tone Control

IC1-Δ IC2	8340790	**103**	4558	IC3Δ	8340760	**136**	TC9177
				IC4Δ	8340761	**136**	TC9184
TR1	8320497	**20**	BC547B	TR2	8320503	**20**	BC557B
D200-D203	8300058	**209**	1N4148				
C1	4010107	22nF -20+80% 40V		C204	4200512	1μF 20% 50V	
C2	4010106	10nF -20+80% 40V		C205	4200510	10μF 20% 16V	
C3	4200510	10μF 20% 16V		C206	4200512	1μF 20% 50V	
C4				C207	4000139	100pF 5% 63V	
C5	4010106	10nF -20+80% 40V		C208	4200512	1μF 20% 50V	
C6	4010107	22nF -20+80% 40V		C209	4100237	2.2nF 5% 63V	
C200-C201	4000135	150pF 5% 63V		C210	4130268	10nF 5% 63V	
				C211	4200510	10μF 20% 16V	
C202	4200512	1μF 20% 50V		C212	4130304	22nF 10% 63V	
C203	4130328	33nF 5% 63V		C213	4130306	100nF 10% 63V	
P74	7220432	Plug 10/10		P79	7220712	Plug 5pol.	

PCB 60, 8001199
Power Supply and Output Ampl.

IC1	8350045	141	4151-5
IC2△	8340782	136	4094

TR1	8320503	20	BC557B	TR14			
TR2	8320507	20	BC337-25	TR15	8320503	20	BC557B
TR3	8320503	20	BC557B	TR16	8320497	20	BC547B
TR4	8320507	20	BC337-25	TR20-	8320503	20	BC557B
TR5	8320503	20	BC557B	TR21			
TR7	8320241	32	BD138	TR22	8320507	20	BC337-25
TR8	8320514	20	BC546B	TR23	8320503	20	BC557B
TR9	8320497	20	BC547B	TR24	8320497	20	BC547B
TR10	8320503	20	BC557B	TR200	8320497	20	BC547B
TR11	8320497	20	BC547B	TR201-	8320514	20	BC546B
TR12	8320503	20	BC557B	TR202			
TR13-	8320497	20	BC547B				

D1	8300058	209	1N4148	D6	8300058	209	1N4148
D2-	8300023	209	1N4002	D7	8300135	209	3.3V 5% 0.4W
D3				D8-	8300023	209	1N4002
D4	8300313	209	15V 2% 0.4W	D9			
D5	8300556	209	6.2V 1.3W	D200-	8300058	209	1N4148

R16-	5020110	10kΩ 1% 1/4W	R41	5020870	100Ω 10% 0.3W
R17			R43	5020342	750Ω 1% 1/4W
R19	5020145	8.66kΩ 1% 1/4W	R100	5220044	330kΩ 5% 1/2W
R20	5020110	10kΩ 1% 1/4W	R200	5020565	8.25kΩ 1% 1/4W
R21	5020314	931Ω 1% 1/4W	R201	5020832	3.92kΩ 1% 1/4W
R22	5020189	1.07kΩ 1% 1/4W	R204	5020568	2.21kΩ 1% 1/4W
R25	5020533	402Ω 1% 1/4W	R207	5020814	562Ω 1% 1/4W
R26	5020789	1.24kΩ 1% 1/4W	R208	5010819	56kΩ 2% 1/4W
R31	5020200	2.1kΩ 1% 1/4W	R215	5100175	0.33Ω 10% 2W
R33	5020213	4.32kΩ 1% 1/4W			

C1	4200879	47μF 50% 40V	C17-	4010107	22nF -20+80% 40V
C2	4200652	100μF 20% 100V	C18		
C3	4000193	47pF 5% 63V	C19	4200515	4.7μF 20% 25V
C4	4010128	470pF 10% 63V	C20	4010107	22nF -20+80% 40V
C5	4130236	330nF 20% 63V	C200	4200510	10μF 20% 16V
C6	4010105	1nF 10% 63V	C201	4200525	22μF 20% 10V
C7	4130230	100nF 20% 63V	C202	4010122	680pF 10% 63V
C9	4130230	100nF 20% 63V	C203	4200516	47μF 20% 16V
C10	4200511	100μF 20% 10V	C204	4200271	47μF 10+100% 63V
C11	4010107	22nF -20+80% 40V	C205	4130313	470nF 20% 63V
C12	4200517	2.2μF 20% 50V	C206-	4130233	220nF 20% 63V
C13	4200368	100μF 20% 100V	C207		
C14	4200342	10μF -10+50% 63V	C210-	4010027	1nF 10% 63V
C15	4010107	22nF -20+80% 40V	C211		
C16	4200342	10μF -10+50% 63V			

L200	6850165	3μH

P80	7220424	Plug 2/2	P84	7220428	Plug 6/6
P81	7220313	Plug 3pol.	P85	7220430	Plug 8/8
P82	7220482	Plug5/5	P86	7220426	Plug 4/4
P83	7220426	Plug 4/4	P87	7220418	Plug 9/9

RL1	7600073	Relay 6V

PCB 61, 8002930
Speaker Socket

C200	4010106	10nF -20+80% 40V	C203		
C201	4010105	1nF 10% 63V	C204	4010105	1nF 10% 63V
C202-	4010106	10nF -20+80% 40V			

P88-	7210521	4 pol.	P90-	7210520	3 pol.
P89			P91		

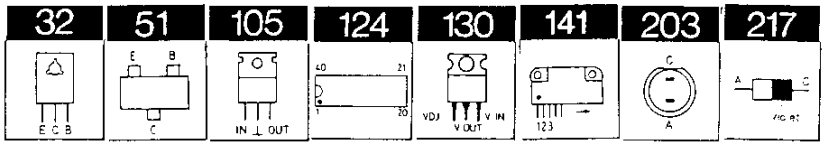

Resistors not referred to are standard, see page 3-14

Δ indicates that static electricity may destroy the component.

PCB 62, 8002731
Rectifiers

D1	8300487	KBU6D	D6	8300058	1N4148
D2-D5	8300294	1N5401 100V	D7	8300487	KBU6D

C1	4130230	100nF 20% 63V	C11		
C2-C4	4130104	220nF 20% 100V	C12	4200393	2200µF -10+50% 40V
			C14-C16	4130391	100nF 20% 63V
C5-C6	4200629	6800µF-10+50% 40V	C17	4200636	1000µF -10+50% 25V
C9-	4130391	100nF 20% 63V	C18	4130391	100nF 20% 63V

P93	7220185	Plug 3/3	P96	7220196	Plug 3/4
P94	7220313	Plug 3pol.	P97	7220403	Plug 4pol.
P95	7220403	Plug 4pol.	P98	7220312	Plug 2pol.

RL1	7600084	Relay 6VDC

FOR SERVICE MANUALS
CONTACT:
MAURITRON TECHNICAL SERVICES
www.mauritron.co.uk
TEL: 01844 - 351694
FAX: 01844 - 352554

PCB 64, 8013442
Fuses
Type 2506, 2511

D3-D4	8300023	1N4002

C1	4200421	1000µF-10+50% 6,3V	C	4130079	22nF 20% 250V

F1-F2	6600068	4AT 250V	F6		
			F7-F8	6600064	250mA 250V
F3-F4	6600067	2,5AT 250V	F9	6609026	Term. sikr.
F5-	6600065	1,6AT 250V			

PCB 64, 8013447
Fuses
Type 2508, 2512

R1	5000103	3,3MΩ 10% 1/2W

C	4130079	22nF 20% 250V

F1	6609035	Term. Sikr. 125GRD	F6-	6600075	2,5AT 125V
F2-	6600077	T400mA 125V	F7		
F3			F9-	6600079	5AT 125V
F4-	6600056	4AT 125V	F10		
F5					

PCB 64, 8013448
Fuses
Type 2509, 2513

C	4130079	22nF 20% 250V

F1	6609024	Term. Sikr. 125GRD	F2, F3	6600000	250mAT 250V
F9, F10	6600010	T4A-T 250V			
F4, F5	6600020	2,5AT 250V	F6, F7	6600022	1,6AT 250V

PCB 65, 8002929
Power Supply Voltage Regulators

IC3	8340049	**105** +12V	IC4	8340244	**130** 317 244

TR17	8320429	– BD 435	TR19	8320428	– BD 438
TR18	8320239	**124** BD 137			

PCB 66, 8002758
CD ON/OFF Relay

D1-D2	8300058	1N4148
C2	4200712	68µF 10+30% 40V
RL1	7600085	Relay 6VDC
P106	7220590	Plug 9pol.

PCB 68, 8001263
Line IN/OUT

C210-C211	4010027	1nF 10% 63V

PCB 69, 8001226
IR

IC1	8341226		4001B				
TR1	8320615	**51**	BC848B	TR3	8320816		BC846B
TR2	8320616	**51**	BC858B	TR4	8320682	**32**	BD788
D1	8300482	**217**	4148	D6			
D2	8300023	**209**	1N4002	D7	8330145	-	880nM
D3-	8330140	**203**					
R11	5011845	8.2ohm 1% 1/4W		R15	5011845	8.2ohm 1% 1/4W	
R14	5020489	100ohm 10% 0.3W					
C1	4000342	1nF 10% 50V		C9-C10	4010166	100nF -20+80% 50V	
C2	4010166	100nF -20+80% 50V		C11-C13	4200688	47µF 20% 50V	
C3-C4	4000236	470pF 10% 50V		C14	4200927	2.2µ	
C5	4000321	220pF 5% 50V		C15	4010166	100nF -20+80 50V	
C6	4000292	100pF 5% 50V		C16	4000233	220pF 5% 50V	
C7	4000284	330pF 5% 50V					
C8	4000281	82pF 5% 50V					
L1-L2	8020705	Coil 100µH		L3	8020626	Coil 470µH	
P1	7220279	Plug 2/2		P2	7220579	Plug 6/6	
X1	8030024	455kHz					

***Bemærk!**
Retuner mikroprocessormodulet, bestillingsnr. 8001130 for ombytning, hvis Beocenter 9500-displayet viser CODE.

Undgå ved servicering på PCB40 at fjerne eller kortslutte forsyningsspændingen fra lithium-batteriet til den statiske RAM, pos. 40IC6.
Hvis det sker slettes dataerne i RAM og Beocenter 9500-displayet viser CODE.

Note!
Return the microprocessor module, part no. 8001130, for replacement if the Beocenter 9500 displays CODE.

When servicing PCB40 avoid removing or short-circuiting the supply voltage from the lithium battery to the static RAM, pos. 40IC6.
If this happens the data in the RAM are erased and Beocenter 9500 displays CODE.

3-14

Standard Resistors:

Resistors SMD 2% 1/8 W
SMD 5% 1/8 W

	5%	2%	2%	2%	2%	2%	5%	5%
	x1	x10	x100	x1K	x10K	x100K	x1M	x10M
1.0	5011623	5011647	5011218	5011227	5011241	5011256	5011267	5011730
1.1	5011624	5011648	5011669	5011681	5011689	5011694	5011707	
1.2	5011625	5011649	5011219	5011682	5011490	5011257	5011708	
1.3	5011626	5011650	5011670	5011683	5011242	5011258	5011709	
1.5	5011627	5011651	5011220	5011228	5011243	5011259	5011710	
1.6	5011628	5011652	5011671	5011684	5011690	5011695	5011711	
1.8	5011629	5011653	5011672	5011229	5011244	5011260	5011712	
2.0	5011630	5011654	5011673	5011685	5011691	5011696	5011713	
2.2	5011216	5011655	5011674	5011230	5011245	5011261	5011714	
2.4	5011634	5011656	5011675	5011686	5011246	5011697	5011715	
2.7	5011635	5011657	5011497	5011231	5011247	5011262	5011716	
3.0	5011731	5011658	5011499	5011500	5011692	5011698	5011717	
3.3	5011217	5011659	5011676	5011232	5011248	5011263	5011718	
3.6	5011636	5011660	5011677	5011687	5011249	5011264	5011719	
3.9	5011637	5011661	5011221	5011233	5011491	5011699	5011720	
4.3	5011638	5011662	5011498	5011688	5011492	5011700	5011721	
4.7	5011639	5011269	5011222	5011234	5011250	5011265	5011722	
5.1	5011640	5011663	5011678	5011235	5011493	5011701	5011723	
5.6	5011641	5011664	5011223	5011236	5011251	5011702	5011724	
6.2	5011642	5011665	5011224	5011237	5011693	5011703	5011725	
6.8	5011643	5011666	5011225	5011238	5011252	5011704	5011726	
7.5	5011644	5011667	5011679	5011239	5011253	5011705	5011727	
8.2	5011645	5011270	5011226	5011240	5011254	5011266	5011728	
9.1	5011646	5011668	5011680	5011489	5011255	5011706	5011729	

(Glue dots, approx. 200, part no. 3181932).

Resistors 5% 1/2 W

	x1	x10	x100	x1K	x10K	x100K	x1M	x10M
1.0		5011000	5011013	5011028	5011044	5010313	5011069	5011083
1.2	5011406	5011001	5011014	5011030	5011045	5011058	5010421	
1.5	5010727	5011002	5011015	5011031	5011046	5011059	5011071	
1.8	5010857	5010787	5011016	5011033	5011047		5011072	
2.2	5011335	5010708	5010815	5011034	5011048	5011061	5011074	
2.7		5010803	5011018	5010055	5011049	5011062	5011075	
3.3	5020803	5011007	5011019	5011037		5011063	5010381	
3.9		5010782	5011021	5010700	5011051		5010392	
4.7	5010765	5011009	5011022	5010035	5010036	5011065	5011078	
5.6		5011010	5011023	5011041		5011066	5011079	
6.8	5010874	5011011	5011024	5011042	5010810	5011067	5011080	
8.2		5011012	5011026	5011043	5010038	5011068	5011081	

FOR SERVICE MANUALS
CONTACT:
MAURITRON TECHNICAL SERVICES
www.mauritron.co.uk
TEL: 01844 - 351694
FAX: 01844 - 352554

Resistors 5% 1/4 W

	x1	x10	x100	x1K	x10K	x100K	x1M	x10M
1.0	5010592	5010506	5010065	5010040	5010059	5010049	5010054	5010638
1.2		5010595	5010128	5010153	5010046	5010047	5010665	
1.5	5011348	5010468	5010057	5010247	5010053	5010063	5010093	
1.8		5010822	5010362	5010066	5010135	5010072	5010791	
2.2	5010682	5010448	5010092	5010064	5010079	5010120	5010245	
2.7	5010925	5010403	5010000	5010298	5010141	5010083	5010431	
3.3		5010253	5010044	5010076	5010075	5010117	5010848	
3.9	5011377	5010622	5010070	5010069	5010060	5010073	5010714	
4.7	5010888	5010411	5010058	5010048	5010045	5010077	5011513	
5.6	5010706	5010151	5010067	5010041	5010061	5010071	5010658	
6.8	5010904	5010039	5010144	5010052	5010062	5010074		
8.2	5010880	5010056	5010068	5010154	5010091	5010505		

Resistors 5% 1/8 W

	x1	x10	x100	x1K	x10K	x100K	x1M	x10M
1.0		5011464	5011357	5010816	5010935	5011440	5011459	5020875
1.2		5011351	5011084	5011442	5011338	5011341	5011175	
1.5		5011463	5011443	5011178	5011364	5011398	5011460	
1.8			5011350	5011361	5011344	5011468		
2.2	5011032	5011376	5010886	5011353	5010833	5011369	5011342	
2.7		5011471	5011355	5011362	5011366	5011370	5011478	
3.3			5011337	5010827	5011346	5011371	5011462	
3.9		5011438	5011817	5011157	5011457	5011372	5020876	
4.7	5011363	5011038	5011441	5011363	5010937	5011343	5011611	
5.6		5011412	5011358	5010885	5011166	5011340		
6.8		5011356	5011336	5010839	5011367	5011458		
8.2		5011466	5011354	5011339	5011368	5011373		

List of mechanical parts
Bottom

10modul	8002715	AM/FM,RF,IF Decoder
	8002893	AM/FM, RF, IF Decoder, type 2509, 2513
	8002891	AM/FM, RF, IF Decoder, type 2508/2510, 2512/2514
	2542657	Bracket
	3304125	Shield box
17modul	8050093	Tuner
	8050102	Tuner, type 2509, 2513
	3302396	Shield, tuner
21modul	8002732	Connection Board
30modul	8005264	Servo
31modul	8005214	CD Decoder
	3152461	Holder
40modul	8001130	System Control type 9500
	8001211	System Control, type 8500
	3302405	Shield
	8700027	Lithium battery (* See page 3-14)
51modul	8002757	Headphone
52modul	8002734	Mic. Ampl.
53modul	8001252	Input Select
	2542742	Bracket
	3152511	Holder
54modul	8001253	Volume and Output Ampl.
60modul	8001199	Power and Output Ampl.
61modul	8002930	Speaker Socket
62modul	8002731	Rectifiers
65modul	8002929	Power Supply Voltage Regulators
66modul	8002758	CD on/off Relay
68modul	8001263	Line in/out
69modul	8001226	IR
93	8422012	Tape Mechanism
96	8420148	CD Mechanism

4-1

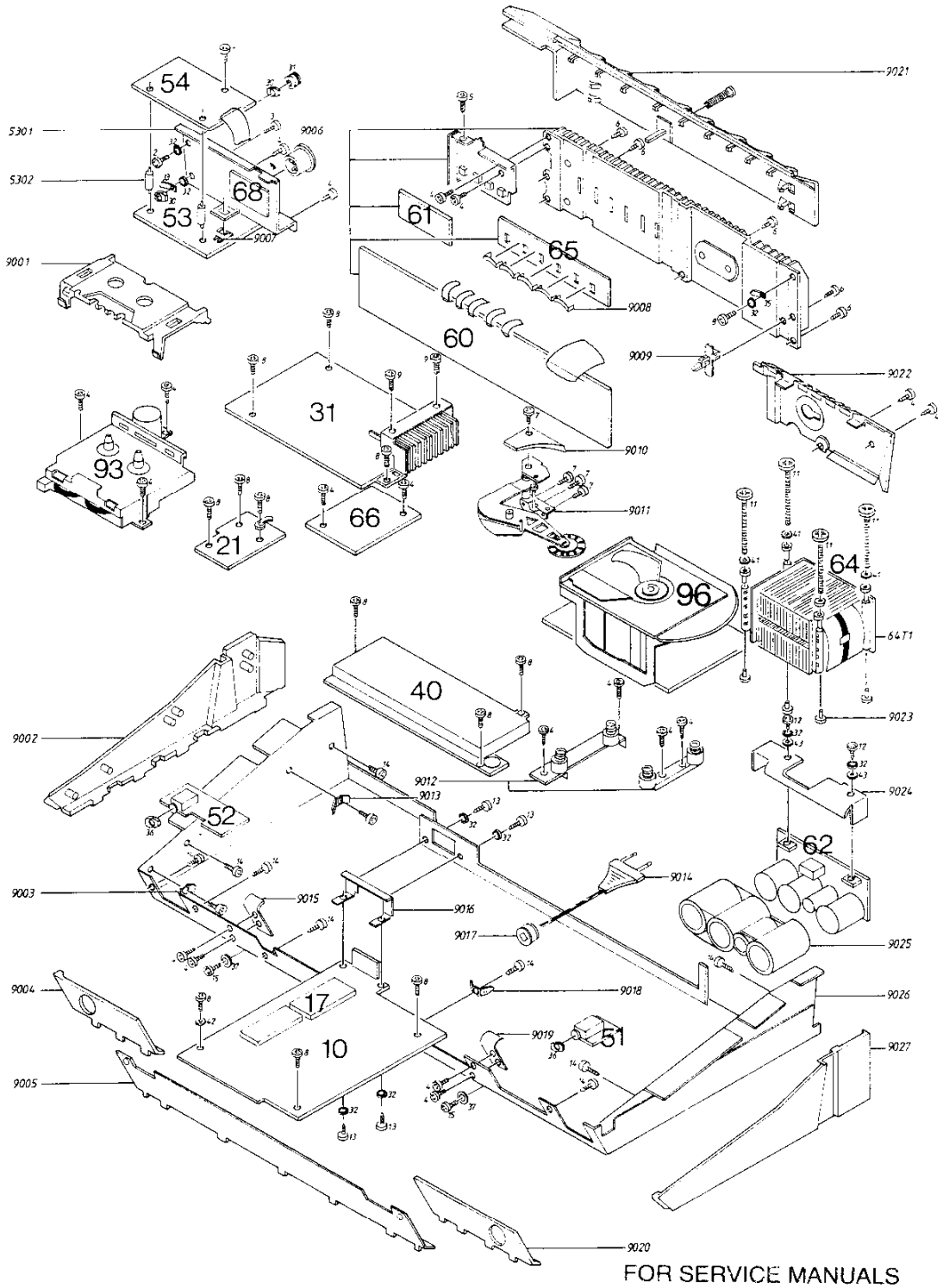

FOR SERVICE MANUALS
CONTACT:
MAURITRON TECHNICAL SERVICES
www.mauritron.co.uk
TEL: 01844 - 351694
FAX: 01844 - 352554

5301	2542742	Bracket
5302	3152511	Holder
9001	3164621	Cover
9002	3470171	Side plate, left
9003	7500176	Solder tag
9004	3450677	Front plate, left
9005	3450985	Front plate, middle
9006	8001199	Heat sink w. PCB
9007	2576109	Spacer
9008	2819235	Spring
9009	3152466	Holder
9010	3164739	Cover
9011	3152655	Holder
9012	3152553	Holder
9013	7500176	Solder tag
9014	6271101	Mains cable
	6270328	Mains cable, type 2508, 2512
	6271119	Mains cable, type 2509, 2513
	6270297	Mains cable, type 2510, 2514
9015	3030101	Hinge
9016	2542657	Bracket
9017		Tightening piece
9018	7500176	Solder tag
9019	3030101	Hinge
9020	3450987	Front plate, right
9021	3164807	Cover
9022	3164589	Cover
64T1	8013442	Transformer,
	8013447	Transformer, type 2508, 2512
	8013448	Transformer, type 2509, 2513
	7530118	Solder tag, insulated
9023	2938154	Bushing
9024	3358224	Heat sink
9025	3152460	Holder
9026	3454375	Bottom
9027	3470172	Side plate, right

FOR SERVICE MANUALS
CONTACT:
MAURITRON TECHNICAL SERVICES
www.mauritron.co.uk
TEL: 01844 - 351694
FAX: 01844 - 352554

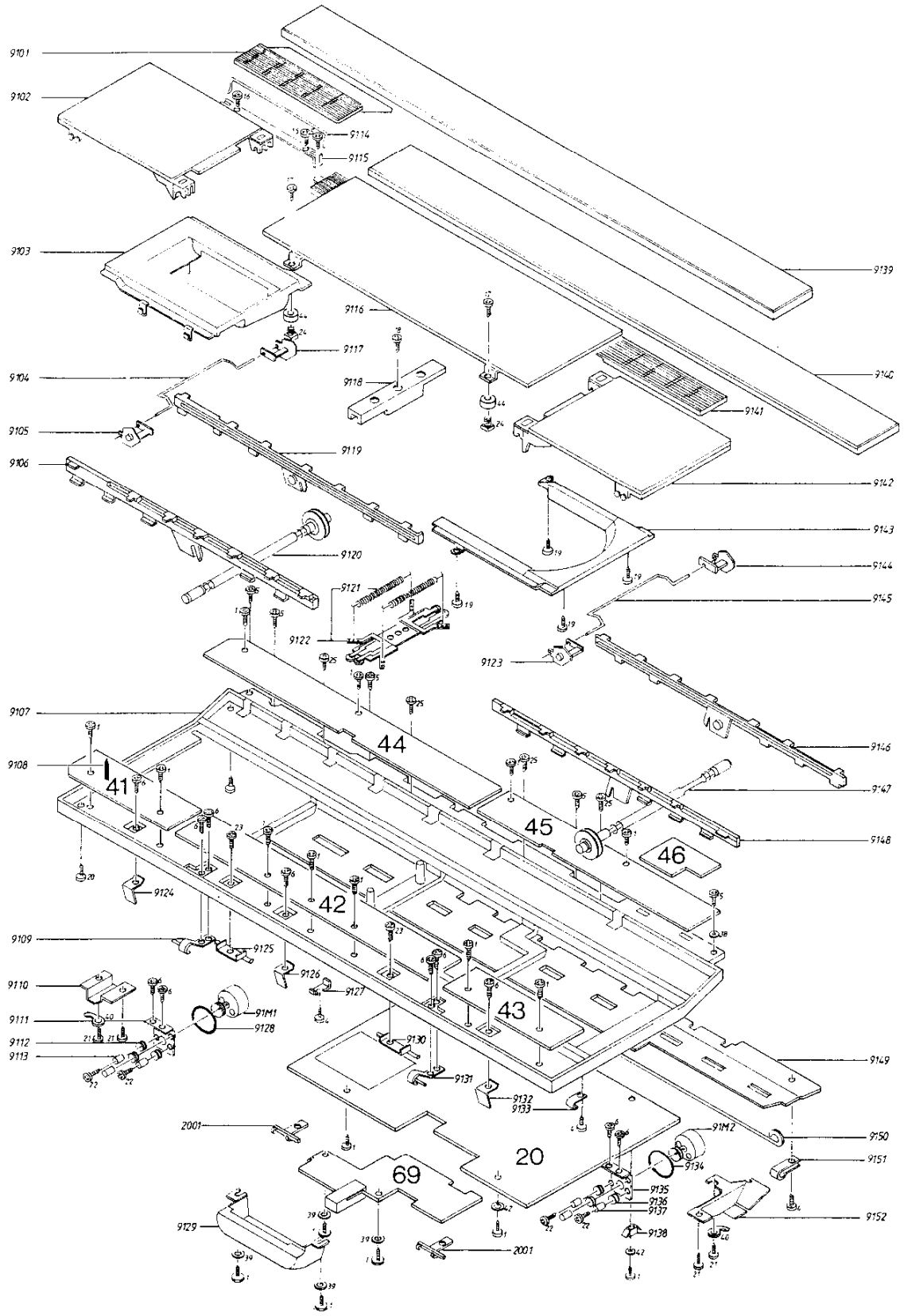
9101
9102
9114
9115
9103
9139
9116
9117
9104
9118
9140
9141
9105
9119
9106
9142
9143
9120
9144
9121
9145
9122
9123
9107
44
9146
9108
41
9147
45
9148
46
9124
42
9109
9125
9126
9110
9127
91M1
9111
9128
9112
9113
43
9130
9149
9131
9132
9133
2001
91M2
9150
9134
20
9151
69
9135
9136
9137
9152
9129
9138
2001

List of mechanical parts
Top

20modul	8004628	Tape Recorder
2001	3030110	Holder
	3170236	Insulator
	3302404	Shield

41modul	8002745	Keyboard left
	3907059	Rubber
	3131257	Housing, small
	3131258	Housing, large
	3947254	Tape 50m

42modul	8002750	Keyboard middle
	3907059	Rubber
	3131257	Housing, small
	3131258	Housing, large
	3947254	Tape 50m

43modul	8002755	Keyboard right
	3907059	Rubber
	3131257	Housing, small
	3131258	Housing, large
	3947254	Tape 50m

FOR SERVICE MANUALS
CONTACT:
MAURITRON TECHNICAL SERVICES
www.mauritron.co.uk
TEL: 01844 - 351694
FAX: 01844 - 352554

44modul	8002738	Display left
	3131257	Housing, small
	3131258	Housing, large
	3947254	Tape 50m

45modul	8002740	Display right
	3131257	Housing, small
	3131258	Housing, large
	3947254	Tape 50m

46modul	8002736	7 Segment Display Parts not shown

9101	3164812	Cover, type 8500
	3164780	Cover, type 9500
9102	3162324	Lid, left, type 8500
	3162321	Lid left, type 9500
9103	3164620	Cover
9104	2830122	Shaft
9105	3014088	Lifter w. cord
9106	3013056	Guide rail
9107	8052348	Chassis type 8500
	8052342	Chassis, type 9500
9108	3907059	Rubber
9109	3030105	Hinge, left
9110	2548236	Bracket
9111	3151234	Holder, left
9112	2938237	Bushing
9113	2930074	Spacer
9114	2830118	Shaft
9115	2530506	Bracket
9116	3162322	Lid, middle, type 8500
	3162325	Lid middle, type 9500
9117	3014088	Lifter w. cord
9118	2542727	Bracket
9119	3013056	Guide rail, left
9120	2831068	Shaft
9121	2810250	Spring
9122	2641137	Plate, cord tightener
9123	3014088	Lifter w. cord
9124	2542667	Bracket
9125	2542681	Bracket
9126	2542667	Bracket
9127	3034070	lock for cover
91M1	8400182	Motor, drawer
9128	2732076	Belt, motor
2001	3030110	Hinge
9129	3322120	Infrared window
9130	2542681	Bracket
9131	3030104	Hinge, right
9132	2542667	Bracket
9133	2515051	Nylon bracket
2001	3030110	Hinge
91M2	8400182	Motor, drawer
9134	2732076	Belt, motor
9135	3151235	Holder, right
9136	2938237	Bushing
9137	2930074	Spacer
9138	2576109	Spacer
9139	3162251	Glass, display
9140	3162310	Glass, keyboard, type 8500
	3162250	Glass Keyboard, type 9500
9141	3164785	Ornamental cover
9142	3162326	Lid, right, type 8500
	3162323	Lid right, type 9500
9143	3164740	Cover
9144	3014088	Lifter w. cord
9145	2830122	Shaft
9146	3013055	Guide rail, right
9147	2831069	Shaft
9148	3013056	Guide rail, left
9149	2568868	Rail, ornamental cover
9150	2850136	Service arm
9151	2515001	Nylon bracket
9152	2548235	Bracket

4-4

Survey of screws, mashers, nuts, etc.

1	2013099	Screw 2.9x6.5
2	2039069	Screw AM 3x8
3	2039027	Screw AM 3x6
4	2039020	Screw AM 3x5
5	2038094	Screw AM 3x10
6	2039028	Screw AM 3x8
7	2036036	Screw AM 3x30
8	2013077	Screw U2.9x6.5
9	2013095	Screw M2.9x9.5
10	2039006	Screw AM 3x5
11	2034038	Screw AM 2x16
12	2015092	Screw U3.5x13
13	2039008	Screw AM 3x6
14	2039062	Selftapping screw M3x5
15	2038095	Screw AM 3x5 Torx
16	2015091	Screw U3.5x9.5
17	2039034	Screw AM 3x12
18	2015070	Screw M3.5x25
19	2011040	Screw 2.5x5
20	2039037	Screw AM 3x16
21	2013148	Screw 3.0x6
22	2036016	Screw AM 2.6x6
23	2013080	Screw U2.9x9.5
24	2389064	Nut M3x7.5
25	2015091	Screw 3.5x9.5
	2038123	Transport screw
	2625002	Washer
30	2380011	Nut M3
31	2382009	Milled nut M3
32	2625002	Washer A3.3
33	7530087	Solder tag ⌀3.2x12x0.6
34	7530119	Solder tag, insulated 3.1x28
35	7500013	Contact pin ⌀1.3x5x8
36	2380092	Nut M12-1
37	2624042	Washer
38	2622321	Washer B 3.2
39	2622013	Washer 3.2
40	7530091	Solder tag ⌀4.3x24x0.5
41	2622022	Washer 4.3
42	2622052	Fibre washer
43	2622041	Washer 3.
44	2938271	Rubber bushing

Parts not shown

3414074	Cabinet set, veneer
6276133	Main wire bundle
6273126	Set of wires for CD
6275655	Set of wires for tape
6275663	Set of wires for Power
6276211	Var. sets of wires
6276009	Set of wires for Display
3152214	Cablebinder
3397585	Set of foam packing
3391967	Outer carton
3946038	Foam foil
3501061	Users Guide DK type 9500
3501069	Users Guide DK type 8500
3501065	Users Guide S type 9500
3501066	Users Guide SF type 9500
3501059	Users Guide GB type 9500
3501072	Users Guide, type 8500
3501062	Users Guide D type 9500
3501070	Users Guide, type 8500
3501064	Users Guide NL type 9500
3501071	Users Guide, type 8500
3501063	Users Guide F type 9500
3501068	Users Guide I type 9500
3501067	Users Guide E type 9500

FOR SERVICE MANUALS
CONTACT:
MAURITRON TECHNICAL SERVICES
www.mauritron.co.uk
TEL: 01844 - 351694
FAX: 01844 - 352554

Tape mechanism bottom

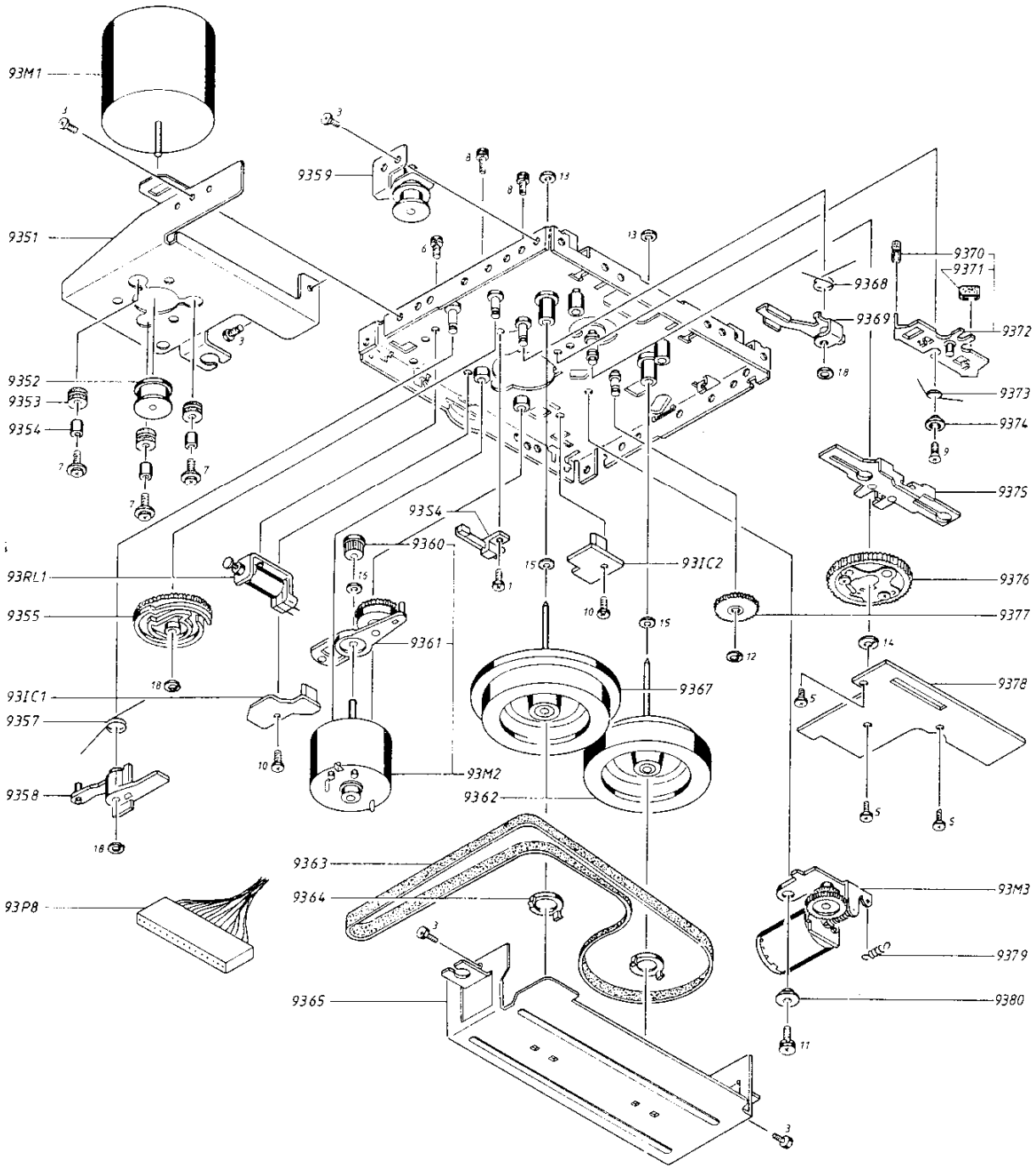

4-5

Tape mechanism top

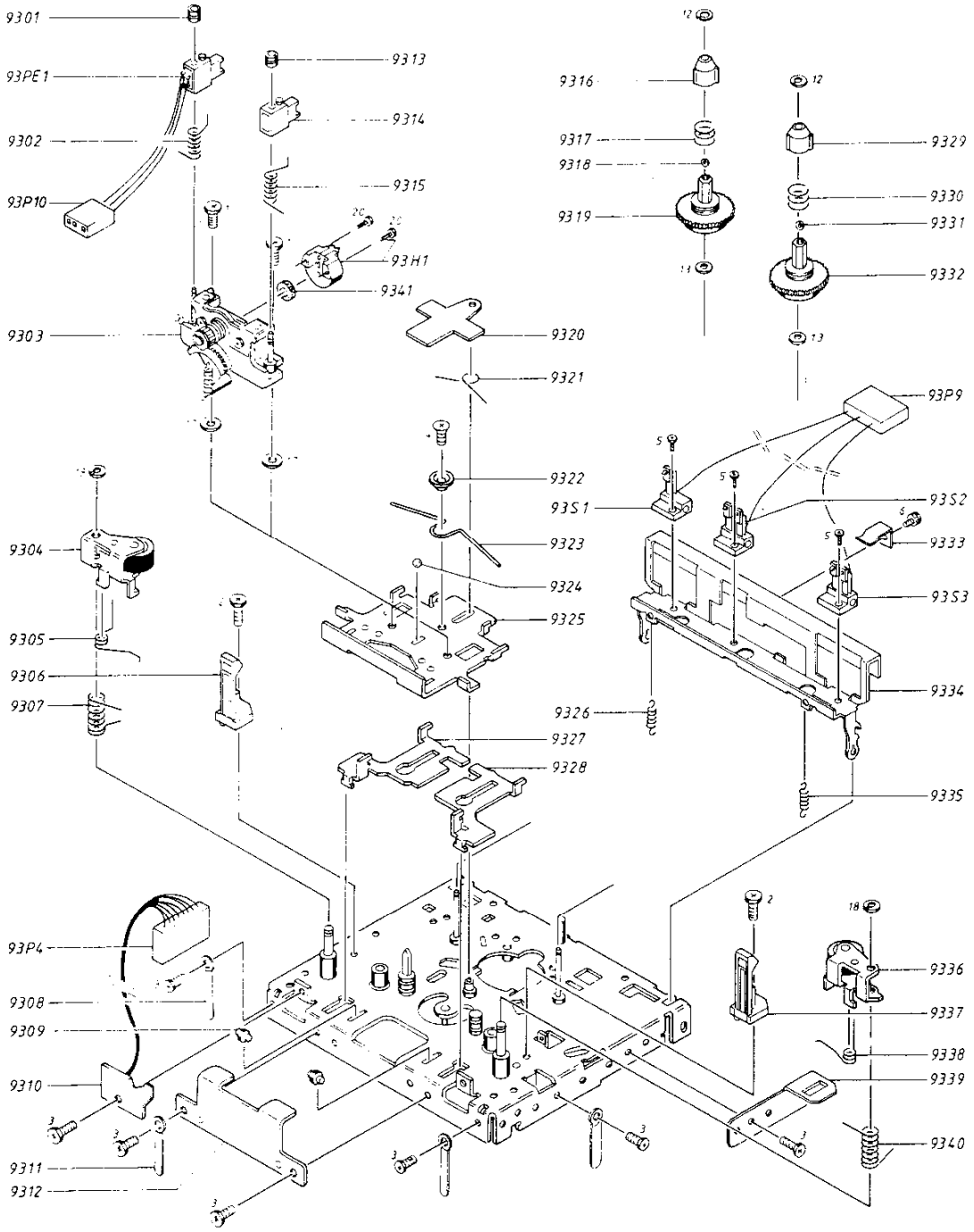

FOR SERVICE MANUALS
CONTACT:
MAURITRON TECHNICAL SERVICES
www.mauritron.co.uk
TEL: 01844 - 351694
FAX: 01844 - 352554

9301	2389085	Nut M2	9322	2932124	Bushing
9302	2818083	Spring	9323	2819222	Spring
9303	3112329	Reversing mechanism	9324	2917018	Roller
9304	2794133	Thrust roller left	9325	3112320	Bracket for tape head bridge
9305	2818085	Spring			
9306	3010028	Arm f. cassette guide	9326	2810212	Spring
9307	2818086	Spring	9327	3112321	Bracket left
9308	3152529	Cable binder	9328	3112322	Bracket right
9309	2804059	Roller	9329	3164634	Cap
9310	6275681	PCB w. cables and socket	9330	2812085	Spring
			9331	2816233	Leaf spring
9311	3152529	Cable binder	9332	2726156	Turntable
9312	3112324	Bracket f. chassis	9333	2810213	Leaf spring
9313	2389085	Nut M2	9334	2548228	Bracket f. contacts
9314	3010027	Tape guide	9335	2810212	Spring
9315	2818084	Spring	9336	2794134	Thrust roller right
9316	3164634	Cap	9337	3010028	Arm f. cassette guide
9317	2812085	Spring	9338	2818087	Spring
9318	2816233	Leaf spring	9339	3112323	Bracket
9319	2726156	Turntable	9340	2818086	Spring
9320	2816232	Leaf spring	9341	2932123	Rubber bushing
9321	2819221	Spring			

93H1	8600096	Tape head

93P4	6275681	Leads w. socket 8 pol	93P10	6275678	Leads w. socket 3 pol
93P9	6275677	Leads w. socket 6 pol			

93PE1	7400343	Opto coupler

93S1	7400341	Switch	93S3	7400340	Switch
93S2	7400340	Switch			

9351	3112325	Bracket f. motor	9367	2794136	Flywheel left
9352	2722047	Pulley	9368	2819224	Spring
9353	2932090	Rubber bushing	9369	3112326	Bracket f. flywheel
9354	2932089	Bushing	9370	2932125	Rubber bushing
9355	2700058	Cam lifting wheel	9371	2932125	Rubber bushing
9357	2819223	Spring	9372	3112330	Arm f. brake
9358	2851208	Arm f. cam lifting wheel	9373	2819225	Spring
			9374	2932126	Bushing
9359	2794138	Bracket with wheel	9375	3112327	Bracket
9360	2700059	Gear wheel	9376	2700061	Wheel w. contact
9361	2794135	Clutch	9377	2700060	Gear wheel
9362	2794137	Flywheel right	9378	8004594	PCB
9363	2732082	Belt	9379	2819226	Spring
9364	2905078	Lock	9380	2932127	Bushing
9365	3112328	Bracket f. cam lifting wheel			

93M1	8400000	Capstan motor	93M3	8400160	Reversing motor
93M2	8400159	Wind motor			

93RL1	6840293	Magnet coil
93S4	7400342	Switch f. cam lifting wheel
93P8	6275676	Leads w. socket 16 pol
93IC1-C2	8004704	PCB w. IC
	6276058	Wire bundle for tape head
	6276071	Set of wire bundles for tape mechanism

FOR SERVICE MANUALS
CONTACT:
MAURITRON TECHNICAL SERVICES
www.mauritron.co.uk
TEL: 01844 - 351694
FAX: 01844 - 352554

Survey of screws, washers etc. for tapedeck

1	2036020	Screw 2.6x4	11	2036062	Screw 2.6x5, w. washer
2	2034063	Screw AM2x5			
3	2039051	Screw 2.6x5	12	2390099	Locking ring
4	2036063	Screw 2.6x4	13	2622408	Washer
5	2034067	Screw 2x4	14	2622421	Washer
6	2034049	Screw 2x4, w. washer	15	2622409	Washer
7	2036023	Screw 2.6x7, w. washer	16	2622422	Washer
			17	2622407	Washer
8	2036010	Screw 2.6x8, w. washer	18	2390098	Locking ring
			20	2033012	Screw
9	2034080	Screw 2x5			
10	2034081	Screw 2x4			

FOR SERVICE MANUALS
CONTACT:
MAURITRON TECHNICAL SERVICES
www.mauritron.co.uk
TEL: 01844 - 351694
FAX: 01844 - 352554

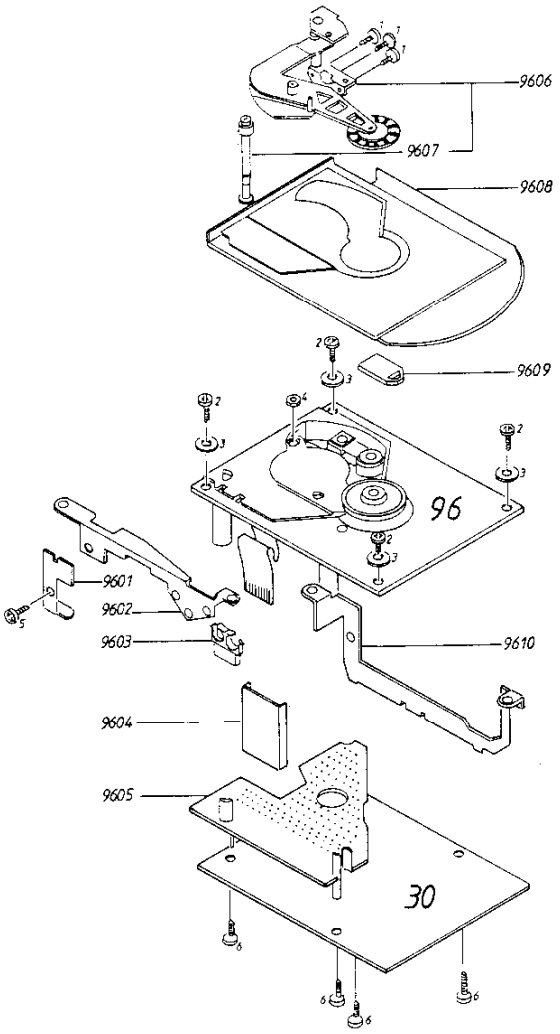

List of mechanical parts

30modul 8005264	Servo	
96modul 8420148	CD Mechanism	
96modul 8420169	CD Mechanism, without Servo and Clamper	

9601	2548242	Bracket	9606	3152655	Clamper
9602	2548233	Bracket	9607	2834105	Holder
9603	3152593	Clamp	9608	3162306	Cover
9604	2574075	Spacer	9609	3164797	Cover
9605	3302439	Screen	9610	2548243	Bracket

Survey of Screws

1	2036036	Screw	4	2380112	Nut M3
2	2039017	Screw	5	2039006	Screw
3	2622022	Washer 4,3	6	2013141	Screw Torx 2.9x9.5

4-8

Smøring

Behovet for eftersmøring er minimalt, men ved større eftersyn og ved udskiftning af vigtige mekaniske dele, bør disse retningslinier følger.

Lubrication

The need for lubrication is negligibible, but the directions given below should be followed during overhauls and when replacing major mechanical components.

Vinkel 9359: Aksel for remhjul. Messingtap på tandhjul 9376. Aksel i vendemekanisme 9303. Aksler for spoletallerkener 9319, 9332.	Bracket 9359: Shaft for belt wheel. Brass tap on wheel 9376. Shaft inside reversing mechanism 9303. Shafts for wheels 9319, 9332.	3984022 Floil GB-TS-1
Alle kurvebaner på kurvehjul 9355. Aksler i topchassis: Glideflade mod kurvehjul 9355, tandhjul 9377, hjul 9376, arm 9358, vinkel 9369 og 9375. Arm for bremse 9372: Glideflader mod topchassis. Snekke på vendemotor 93M3 og aksel for tandhjul på 93M3. Vinkel for kontakter 9334: Omdrejningspunkter mod topchassis. Arm på tandkrans i vendemekanisme 9303: Glideflader mod vinkel 9375. Vinkel 9325: Glideflader mod tappe i topchassis, vinkler 9327, 9328 og ruller 9309. Vinkler 9327 og 9328: Glideflader mod topchassis og vinkel 9325. Rulle 9324: Glideflader mod vinkel 9325 og bladfjeder 9320. Ruller 9309: Glideflader mod topchassis og vinkel 9325.	All curves on cam wheel 9355. Shafts in top chassis: Sliding surface against cam wheel 9355, gear wheel 9377, wheel 9376, arm 9358, bracket 9369 and 9375. Arm for brake 9372: Sliding surfacces against top chassis. Worm on reversing motor 93M3 and shaft for gear wheel on 93M3. Bracket for switches 9334: Points of rotation against top chassis. Arm on toothed rim in reversing mechanism 9303: Sliding surfaces against bracket 9375. Bracket 9325: Sliding surfaces against taps in top chassis, brackets 9327, 9328 and rollers 9309. Brackets 9327 and 9328: Sliding surfaces against top chassis and bracket 9325. Roller 9324: Sliding surfaces against bracket 9325 and leaf spring 9320. Rollers 9309: Sliding surfaces against top chassis and bracket 9325.	3984216 Rocol MTS 1000
PCB 9378: Kontaktflader for slæbekontakter på hjul 9376.	PCB 9378: Contact area for sliding contact on wheel 9376.	3984040 Syrefri vaseline. Vaseline (free from acid).
Låggearsystem modul 91: Alle aksler og tænder på tandhjul.	Lid gear system module 91: All shafts and teeths on gear-wheels.	3984030 Barrierta L5512 (25 gr.).

JUSTERINGER

HF justeringer

Udskiftning af FM tuner
Ved udskiftning af FM tuner er det kun nøvendigt at justere MF spolen 17L7.

MF
Tilslut et oscilloskop til 10IC2 ben 8.
Tilslut en sweepgenerator til antenneindgangen og indstil den til 87,5 MHz.
Tryk »Radio«.
Tryk »Search«.
Tryk »AM-FM« til displayet viser 87.5.
Tryk »Manual«.
Juster 17L7 til maksimum og symmetrisk MF kurve.

TUNER JUSTERINGER (KUN HVIS TUNEREN ER MISJUSTERET)

Oscillator
Der skal ikke tilføres signal.
Tilslut DC voltmeter mellem 17TP11 og ben 8 på tuneren.
Tryk »Radio«.
Tryk »Search«.
Tryk »AM-FM« til displayet viser 87,5.
Juster 17L8 til 0V.

HF 87,5 MHz
Tilslut et oscilloskop til 10IC2 ben 8.
Tilslut en sweepgenerator til antenneindgangen og indstil den til 87,5 MHz.
Tryk »Radio«.
Tryk »Search«.
Tryk »AM-FM« til displayet viser 87,5.
Tryk »Manual«.
Juster 17L2, 17L4, 17L5 og 17L7 til maksimum og symmetrisk MF kurve.

HF 108 MHz
Tryk »Radio«.
Tryk »Search«.
Tryk »Freq«.
Tryk 1080.
Tryk »Manual«.
Sweepgeneratorens frekvens ændres til 108 MHz.
Juster 17R32, 17R33 og 17R34 til maksimum.

Detektor
Tilslut oscilloskop til 10IC2 ben 8.
Tilslut DC voltmeter over 10R19 (10TP12 og 10TP13).
Tryk »Radio«.
Tryk »Search«.
Tryk »Am-FM« til displayet viser 87,5.
Tryk »Freq«.
Tryk »940«.
Tryk »Manual«.

ADJUSTMENTS

RF Adjustments

Replacement of FM tuner
When replacing an FM tuner, it is only necessary to adjust the IF coil 17L7.

IF
Connect an oscilloscope to 10IC2 pin 8.
Connect a sweep generator to the aerial input and adjust it to 87.5 MHz.
Press "Radio".
Press "Search".
Press "AM-FM" until the display shows 87.5.
Press "Manual".
Adjust 17L7 to maximum and symmetrical IF curve.

TUNER ADJUSTMENT (ONLY IF TUNER IS MALADJUSTED)

Oscillator
Do not input a signal.
Connect DC voltmeter between 17TP11 and the tuner's pin 8.
Press "Radio".
Press "Search".
Press "AM-FM" until the display shows 87.5.
Adjust 17L8 to 0V.

RF 87.5 MHz
Connect an oscilloscope to 10IC2 pin 8.
Connect a sweep generator to the aerial input and adjust it to §7.5MHz.
Press "Radio".
Press "Am-FM" until the display shows 87.5.
Press "Manual".
Adjust 17L2, 17L4, 17L5 and 17L7 to maximum and symmetrical IF curve.

RF 108 MHz
Press "Radio".
Press "Search".
Press "Freq".
Press 1080.
Press "Manual".
Change sweep generator frequency to 108MHz.
Adjust 17R32, 17R33 and 17R34 to maximum.

Detector
Connect oscilloscope to 10IC2 pin 8.
Connect DC voltmeter across 10R19 (10TP12 and 10TP13).
Press "Radio".
Press "Search".
Press "AM-FM" until the display shows 87.5.
Press "Search".
Press "940".
Press "Manual".

5-1

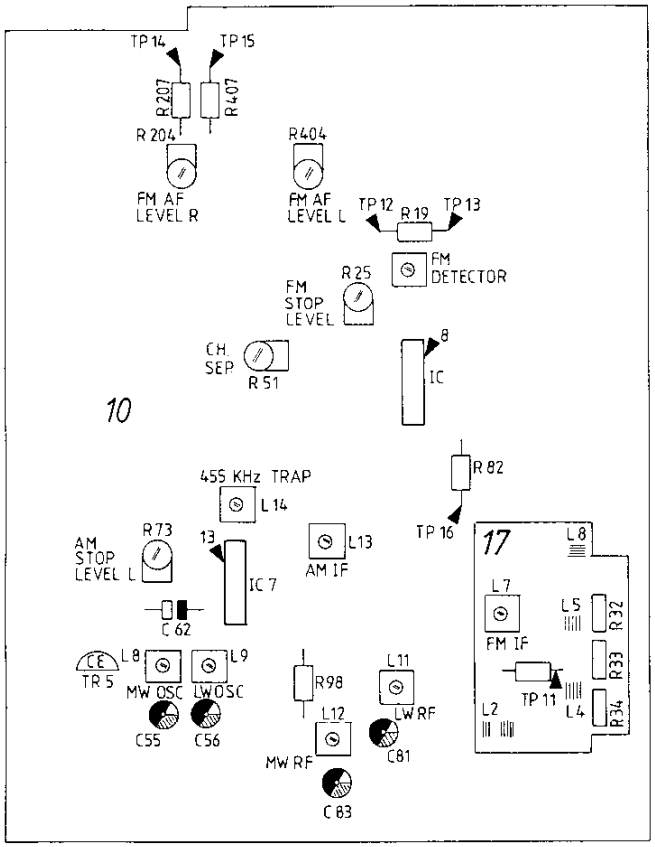

FOR SERVICE MANUALS
CONTACT:
MAURITRON TECHNICAL SERVICES
www.mauritron.co.uk
TEL: 01844 - 351694
FAX: 01844 - 352554

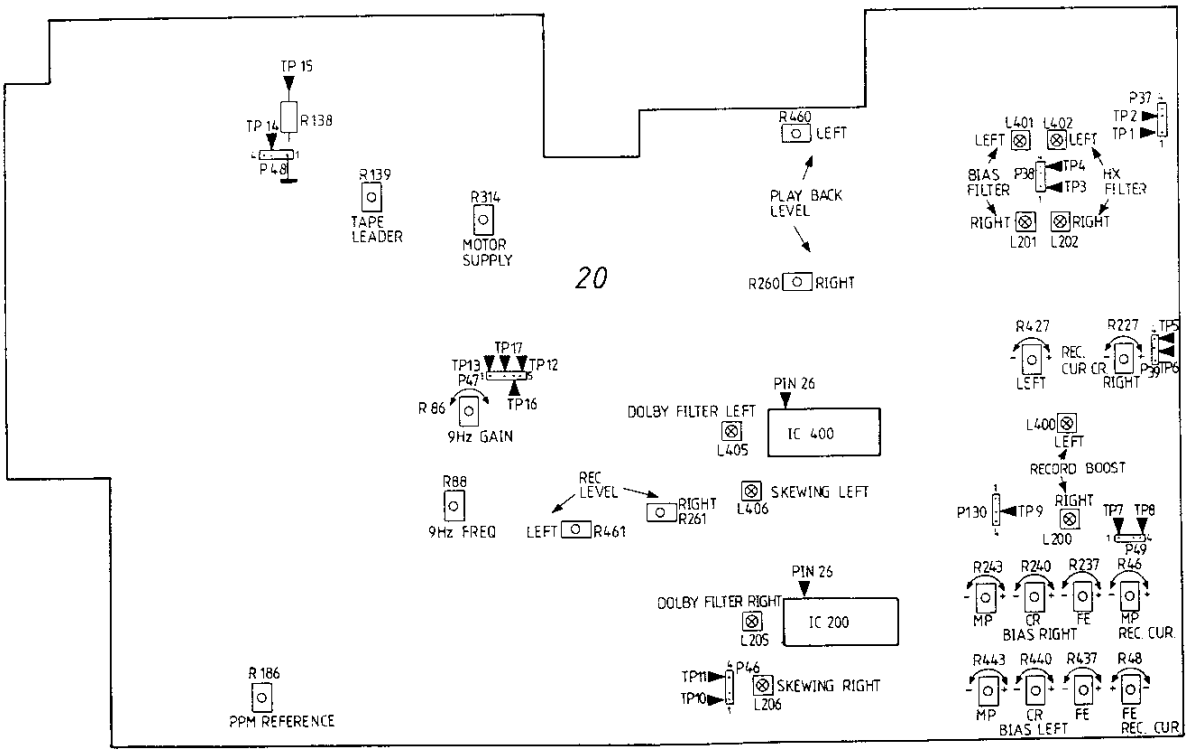

Tilslut en målesender til antenneindgangen og indstil den til 94 MHz.
Finindstil målesenderens frekvens til minimum 2. harmonisk forvrængning af signalet, som vist på kurven.

Connect a signal generator to the aerial input and adjust it to 94MHz.
Fine-tune the signal generator to at least second harmonic distortion of the signal as indicated on the curve.

RIGTIG

FORKERT

Juster 10L2 så tæt mod 0V DC som muligt.
NB! Spændingen over 10R19 vil hele tiden variere p.g.a. korrektionspulser fra mikrocomputeren.

Efter detektor justering indstil FM DISPLAY INDIKERING se afsnit 7-?.

Adjust 10L2 as close to 0V DC as possible.
NOTE! The voltage across 10R19 will vary continuously because of correction pulses from the microcomputer.
After adjustment of the detector, adjust the FM DISPLAY INDICATION, see section 7-?.

FM LF output

Tilslut en målesender til antenneindgangen og indstil den til mono, 94MHz, 1mV EMF, Δ±75 kHz.
Tilslut LF voltmeter til 10TP14 (10TP15).
Tryk »Radio«.
Tryk »Search«.
Tryk »AM-FM« til displayet viser 87,5.
Tryk »Freq«.
Tryk 940.
Juster 10R204 (10R404) til 1V RMS.
(Type 2503 justeres til 700mV RMS).

FM AF output

Connect a signal generator to the aerial input and adjust it to mono, 94MHz, 1mV EMF, Δ ± 75kHz.
Connect AF voltmeter to 10TP14 (10TP15).
Press "Radio".
Press "Search".
Press "AM-FM" until the display shows 87.5.
Press "Freq".
Press 940.
Adjust 10R204 (10R404) to 1V R.M.S.(Adjust type 2503 to 700mV R.M.S.)

Kanalseparation

Tilslut en stereokoder (Encoder) til antenneindgangen og indstil den til 94 MHz og umoduleret signal i den ene kanal.
Tilslut LF voltmeter til 10TP14 eller 10TP15 (den umodulerede kanal).
Tryk »Radio«.
Tryk »Search«.
Tryk »AM-FM« til displayet vises 87,5.
Tryk »Freq.«
Tryk 940.
Juster 10R51 til minimum signal i den umodulerede kanal.
Tilslut LF voltmeter til den anden kanal, og indstil stereokoderen til umoduleret signal i den samme kanal.
Kontroller, juster til symmetrisk kanalseparation.

Channel separation

Connect a stereo encoder to the aerial input and adjust it to 94MHz and unmodulated signal in one channel.
Connect AF voltmeter to 10TP14 or 10TP15 (the unmodulated channel).
Press "Radio".
Press "Search".
Press "AM-FM" until the display shows 87.5.
Press "Freq."
Press 940.
Adjust 10R51 to minimum signal in the unmodulated channel.
Connect AF voltmeter to the other channel, and adjust the stereo encoder to unmodulated signal in the same channel.
Check, adjust to symmetrical channel separation.

FM stop niveau

Tilslut en målesender til antenneindgangen, og indstil den til 94MHz, 20μV EMF, Δ±75 kHz.
Tilslut DC voltmeter til kollektor på 10TR5.
Tryk »Radio«.
Tryk »Search«.
Tryk »AM-FM« til displayet visere 87,5.
Tryk Freq.«
Tryk 940.
Drej 10R25 mod uret til stop.
Drej 10R25 med uret til spændingen på kollektoren af 10TR5 skifter fra high til low.

FM stop level

Connect a signal generator to the aerial input, and adjust it to 94MHz, 20μV EMF, Δ ±75kHz.
Connect DC voltmeter to the collector at 10TR5.
Press "Radio".
Press "Search".
Press "AM-FM" until the display shows 87.5.
Press "Freq".
Press 940.
Turn 10R25 anticlockwise to stop.
Turn 10R25 clockwise until the collector voltage of 10TR5 switches from high to low.

AM

For at undgå indvirkning fra AGC'en, anbefales det at kortslutte 10C62.

LW oscillator

Der skal ikke tilføres signal.
Tilslut DC voltmeter til 10TP16.
Tryk »Radio«.
Tryk »Search«.
Tryk »AM-FM« til frekvensdisplayet viser 150.
Juster 10L9 til 2V±0,25V.
Tryk »Freq«.
Tryk 350.
Juster 10C56 til 25V±0,5V
Gentag evt. proceduren.

MW oscillator

Der skal ikke tilføres signal.
Tilslut DC voltmeter til 10TP16.
Tryk »Radio«.
Tryk »Search«.
Tryk »AM-FM« til frekvensdisplayet viser 150.
Tryk »Freq«.
Tryk 520.
Juster 10L8 til 2V±0,25V.
Tryk »Freq«.
Tryk 1610.
Juster 10C55 til 25V±0,5V.
Gentag evt. proceduren.

AM MF

Tilslut en sweepgenerator til antenneindgangen, og indstil den til centerfrekvens 455 kHz Δ10 kHz.
Tilslut et oscilloskop til 10IC7 ben 13.
Tryk »Radio«.
Tryk »Search«.
Tryk »AM-FM« til frekvensdisplayet viser 150.
Tryk Freq«..
Tryk 1500.
Kortslut 10R98.
Juster 10L13 og 10L14 til maksimum og symmetrisk MF kurve.
Kortslutningen over 10R98 fjernes.

ANTENNEKREDSE

MW antennekredsene **skal** justeres først.

MW

Tilslut en målesender til antenneindgangen, og indstil den til 1500 kHz, 30% modulation.
Tilslut oscilloskop eller LF voltmeter til 10IC7 ben 13.
Tryk »Radio«.
Tryk »Search«.
Tryk »AM-FM« til frekvensdisplayet viser 150.
Tryk »Freq«.
Tryk 1500.
Juster 10C83 til maksimum output.
Målesenderens frekvens ændres til 575 kHz.
Tryk »Freq«.
Tryk 575 kHz.
Juster 10L12 til maksimum output.
Gentag evt. proceduren.

AM

In order to avoid any kind of influence from the AGC, it is recommended that 10C62 be short-circuited.

LW oscillator

Do not input a signal.
Connect DC voltmeter to 10TP16.
Press "Radio".
"Search".
Press "AM-FM" until the frequency display shows 150.
Adjust 10L9 to 2V ± 0.25V.
Press "Freq".
Press 350.
Adjust 10C56 to 25V ± 0.5V.
Repeat this procedure if necessary.

MW oscillator

Do not input a signal.
Connect DC voltmeter to 10TP16.
Press "Radio".
Press "Search".
Press "AM-FM" until the frequency display shows 150.
Press "Freq".
Press 520.
Adjust 10L8 to 2V ± 0.25V.
Press "Freq".
Press 1610.
Adjust 10C55 to 25V ± 0.5V.
Repeat this procedure if necessary.

AM IF

Connect a sweep generator to the aerial input, and adjust it to centre frequency, 455 kHz Δ 10 kHz.
Connect an oscilloscope to 10IC7 pin 13.
Press "Radio".
Press "Search".
Press "AM-FM" until the frequency display shows 150.
Press "Freq".
Press 1500.
Short-circuit 10R98.
Adjust 10L13 and 10L14 to maximum and symmetrical IF curve.
Remove the short-circuit across 10R98.

AERIAL CIRCUITS

The MW aerial circuits must be adjusted first.

MW

Connect a signal generator to the aerial input, and adjust it to 1500 kHz, 30% modulation.
Connect oscilloscope or AF voltmeter to 10IC7 pin 13.
Press "Radio".
Press "Search".
Press "AM-FM" until the frequency display shows 150.
Press "Freq".
Press 1500.
Adjust 10C83 to maximum output.
Signal generator frequency is changed to 575 kHz.
Press "Freq".
Press 575 kHz.
Adjust 10L12 to maximum output.
Repeat this procedure if necessary.

LW

Målesenderens frekvens ændres til 330 kHz.
Tryk »Freq«.
Tryk 330.
Juster 10C81 til maksimum output.
Målesenderens frekvens ændres til 160 kHz.
Tryk »Freq«.
Tryk 160.
Juster 10L11 til maksimum output.
Gentag evt. proceduren.

AM stop niveau

Kortslutninger over 1C62 fjernes.
Tilslut en målesender til antenneindgangen, og indstil den til 1MHz 30% modulation, og 30 µV.
Tilslut DC voltmeter til kollektor på 10TR5.
Tryk »Radio«.
Tryk »Search«.
Tryk »AM-FM« til frekvensdisplayet viser 150.
Tryk »Freq«.
Tryk 1000.
Juster 10R73 til 2,5 V.

Lysintensitet

For at undgå forringelse af display drivernes levetid, må nedennævnte spændingsværdier ikke overskrides ved justering af lysintensitet.

PCB42

Tilslut en modstand på 390 ohm fra ben 20 til ben 31 på 42IC3, og tilslut DC voltmeter over modstanden. Korslut testmode stikket på PCB43 kortvarigt. 42R39 justeres til der måles 2,8V.

PCB44

Tilslut en modstand på 390 ohm fra ben 20 til ben 2 på 44IC1, og tilslut DC voltmeter over modstanden. Kortslut testmode stikket på PCB43 kortvarigt, og tryk derefter »Play«, (øverste venstre display skal lyse).
44R1 justeres til der måles 2,8V.

PCB45

Tilslut en modstand på 390 ohm fra ben 20 til ben 5 på 45IC1, og tilslut DC voltmeter over modstanden. Kortslut testmode stikket på PCB43 kortvarigt, og tryk derefter »Record« i det midterste touchfelt, (midterste display sektion foroven skal lyse).
45R1 justeres til der måles 2,8V.

PCB46

Tilslut en modstand på 100 ohm fra ben 20 til ben 18 på 46IC1, og tilslut DC voltmeter over modstanden. Kortslut testmode stikket på PCB43 kortvarigt, og tryk derefter »Call« (øverste højre display skal lyse).
Juster 45R2 til der måles 0,7V.

LW

The signal generator frequency is changed to 330 kHz.
Press "Freq".
Press 330.
Adjust 10C81 to maximum output.
Change the signal generator frequency to 160 kHz.
Press "Freq".
Press 160.
Adjust 10L11 to maximum output.
Repeat this procedure if necessary.

AM stop level

Remove the short-circuit across 1C62.
Connect a signal generator to the aerial input, and adjust it to 1MHz 30% modulation, and 30µV.
Connect DC voltmeter to the collector at 10TR5.
Press "Radio".
Press "Search".
Press "AM-FM" until the frequency display shows 150.
Press "Freq".
Press 1000.
Adjust 10R73 to 2.5V.

Light intensity

In order to avoid reduction of display drive life, the voltage values given below must not be exceeded when adjusting the light intensity.

PCB42

Connect a 390 ohm resistor from pin 20 to pin 31 of 42IC3 and connect a DC voltmeter across the resistor. Short-circuit the test mode plug of PCB43 briefly. Adjust 42R39 until a value of 2.8 V is measured.

PCB44

Connect a 390 ohm resistor from pin 20 to pin 2 of 44IC1 and connect a DC voltmeter across the resistor. Short-circuit the test mode plug of PCB43 briefly, and then press "Play" (top left-hand display must light up). Adjust 44R1 until a value of 2.8 V is measured.

PCB45

Connect a 390 ohm resistor from pin 20 to pin 2 of 45IC1 and connect a DC voltmeter across the resistor. Short-circuit the test mode plug of PCB43 briefly, and then press "Record" in the middle touch-field (middle display section at the top must light up).
Adjust 45R1 until a value of 2.8 V is measured.

PCB46

Connect a 100 ohm resistor from pin 20 to pin 18 of 46IC1 and connect a DC voltmeter across the resistor. Short-circuit the test mode plug of PCB43 briefly, and then press "Call" (top right-hand display must light up). Adjust 45R2 until a value of 0.7 V is measured.

MEKANISKE JUSTERINGER BÅNDOPTAGER

Højde og azimuth

For at opnå korrekt højdejustering skal højdeværktøj bestillingsnr. 3624026 benyttes.

En tilnærmet justering kan opnås med en spejlkassette.

MECHANICAL ADJUSTMENTS TAPE RECORDER

Height and azimuth

To obtain correct height adjustment, height adjustment tool part no. 3624026 must be used.

Approximate adjustment can be obtained using a mirror cassette.

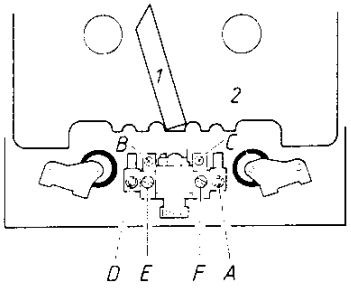

FOR SERVICE MANUALS
CONTACT:
MAURITRON TECHNICAL SERVICES
www.mauritron.co.uk
TEL: 01844 - 351694
FAX: 01844 - 352554

Højde båndstyr

Ilæg justerværktøj 1 og 2.
Tryk »Tape 1«.
NB! På grund af virkningen fra autostoppet kører tonehovedbroen ud umiddelbart efter at den er kørt ind.
Skub værktøj 1 ind i båndstyrene.

Juster henholdsvis A og D sådan at højden passer med overkanten af værktøjet.

Azimuth side 1

Ilæg azimuth bånd bestillingsnr. 6780036.

De to Y indgange på et oscilloskop tilsluttes højre og venstre AUX udgang.

Tryk »Tape 1«, og skruen E justeres til de 2 kurver på oscilloskopet er i medfase ved max. amplitude.

Azimuth side 2

Tryk »Turn«.

Justeringen gøres som azimuth side 1, blot justeres der med skruen F.

Højde side 1

Tryk »Tape 1« (»Side 1« skal lyse, tryk evt. »Turn«).
Værktøj 1 skubbes ind i båndstyret på tonehovedet.

Det øverste båndstyr skal passe med overkanten af værktøj 1.

Højden ændres ved at lægge 0,1 mm afstandsskiver (bestillingsnr. 2624052) under tonehovedopspændingen ved skruen C.

Height, tape guide

Insert adjustment tools 1 and 2.
Press "Tape 1".
NB! Due to the effect from the auto stop the tape head base travels out immediately after it has travelled in.
Push tool 1 into the tape guides.

Adjust A and D respectively so that the height is level with the top edge of the tool.

Azimuth side 1

Load azimuth tape part no. 6780036.

Connect the two Y inputs on an oscilloscope to right and left AUX outputs.

Press "Tape 1" and adjust screw E until the 2 curves on the oscilloscope are in phase at maximum amplitude.

Azimuth side 2

Press "Turn".

Adjustment as for side 1 but using screw F.

Height side 1

Press "Tape 1" ("Side 1" must be lit, press if necessary "Turn").
Push tool 1 into the tape guide on the tape head.

The top tape guide must be level with the top edge of tool 1.

The height can be changed by placing 0.1 mm spacing washers (part no. 2624052) under the tape head mount at screw C.

Højde side 2

Tryk »Tape 1« (»Side 2« skal lyse, tryk evt. »Turn«).

Justeringen gøres som højde side 1, evt. skiver skal lægges ind ved skruen B.

Der skal altid være samme antal skiver i begge sider.

Hvis højden justeres, skal azimuth kontrolleres.

Height, side 2

Press "Tape 1" ("Side 2" must be lit, press if necessary "Turn").

Adjustment as for height, side one; washers, if any should be inserted at screw B.

There must always be the same number of washers in both sides.

If the height is adjusted, the azimuth must be checked.

Frigang trykruller

Thrust roller clearance

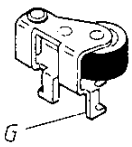

Ved at bukke fligen G, justeres henholdsvis højre og venstre trykrulle, til en frigang fra kapstan akslen på 0,5 mm ved spoling.

By bending pin G, the right and left thrust rollers can be adjusted separately for a clearance to the capstan shaft of 0.5 mm during fast forward and rewind.

ELEKTRISKE JUSTERINGER BÅNDOPTAGER

Henvisningerne er for højre kanal, (henvisningerne i parentes er for venstre kanal).

Justeringerne foretages uden DOLBY NR, hvis andet ikke er nævnt.

Ilæg en kasette for optagelse.

Tryk »Aux«, »Record«, »Programming« og »Dolby« indtil Dolby indikatoren slukker.

Ved justeringer, hvor der skal benyttes tonegenerator, tilsluttes denne AUX indgangen.

Norm bånd benyttet til justering:

6780066 CrO_2 TDK AP 512
6780067 Fe_2O_3 BASF R723 DG
6780101 METAL TDK AP 712

ELECTRICAL ADJUSTMENTS TAPE RECORDER

References are for the right channel, (references in brackets are for the left channel).

Adjustments to be made without DOLBY NR. unless otherwise stated.

Load casette for recording.

Press "Aux", "Record", "Programming" and "Dolby" until the Dolby indicator turns off.

For adjustments requiring an tone generator, this must be connected to the AUX input.

Level tapes used for adjustment:

6780066 CrO_2 TDK AP 512
6780067 Fe_2O_3 BASF R723 DG
6780101 METAL TDK AP 712

Hastighed

Speed

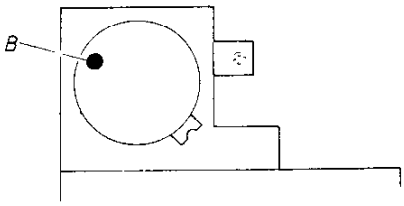

Ilæg wow bånd bestillingsnr. 6780037. (Justeringen skal foretages midt på båndet).

Tilslut wow meter med driftmeter til AUX stikket.

Tryk »Tape 1«, måleresultatet aflæses og noteres.

Tryk »Turn«, og den anden side af båndet afspilles, måleresultatet aflæses og noteres.

Middelværdien af de to tal udregnes.

Hvis måleresultaterne er negative, lægges middelværdien til det højeste af de to tal, og skruen B i motoren justeres til det udregnede resultat.

Hvis måleresultaterne er positive, trækkes middelværdien fra det højeste af de to tal, og skruen B i motoren justeres til det udregnede resultat.

Gengiveniveau

Justering af gengiveniveau er her beskrevet efter to norm bånd.
1: DIN standard, 250 pWb mm.
2: Dolby level, 200 pWb mm.

1: Pegel bånd bestillingsnr. 6780035 ilægges.

LF voltmeter tilsluttes 20TP10 (20TP11).

Tryk »Tape 1«.

20R260 (20R460) justeres til der måles 440 mV.

2: Dolby level calibration bånd MTT-150A ilægges.

LF voltmeter tilsluttes 20TP10 (20TP11).

Tryk »Tape 1«.

20R260 (20R460) justeres til der måles 387 mV.

Optage niveau og PPM reference

Ilæg en kassette for optagelse.

Tryk »Aux«.

Tryk »Record« en gang. (Record pause uden signal tilført).

Tryk »Programming« og derefter »Level« indtil Level indikatoren blinker en gang, og Auto indikatoren slukker.

Tilslut tonegenerator til AUX indgangen og indstil den til 333 Hz og 400 mV.

LF voltmeter tilsluttes 20TP10 (20TP11).

20R261 (20R461) justeres til der måles 440 mV.

20R185 justeres til lysdioden for 0 dB netop lyser.

Tryk "Stop".

Load wow tape part no. 6780037. (The adjustment should be made in a mid-tape position).

Connect wow meter with drift meter to the AUX socket.

Press "Tape 1", read off and note down reading.

Press "Turn" and play other side of tape, read off and note down reading.

Calculate the mean of the two figures.

If the values obtained are negative, add the mean value to the higher of the two figures and adjust screw B in the motor to the value calculated.

If the values obtained are positive, subtract the mean value from the higher of the two figures and adjust screw B in the motor to the value calculated.

Playback level

Adjustment of playback level is described here in accordance with two level tapes.
1: DIN standard, 250 pWb mm.
2: Dolby level, 200 pWb mm.

1: Load standard level tape part no. 6780035.

Connect AF voltmeter to 20TP10 (20TP11).

Press "Tape 1".

Adjust 20R260 (20R460) until a reading of 440 mV is obtained.

2: Load Dolby level calibration tape MTT-150A.

Connect AF voltmeter to 20TP10 (20TP11).

Press "Tape 1".

Adjust 20R260 (20R460) until a reading of 387 mV is obtained.

Rec level and PPM reference

Load cassette for recording.

Press "Aux".

Press "Record" once. (Record pause without signal supplied).

Press "Programming" and then "Level" until the level indicator flash once, and the Auto indicator switches off.

Connect tone generator to the AUX input and set it to 333 Hz and 400 mV.

Connect AF voltmeter to 20TP10 (20TP11).

Adjust 20R261 (20R461) until a reading of 440 mV is obtained.

Adjust 20R185 until the LED for 0 dB starts to light up.

Press "Stop".

Optagehæv

Tonegenerator indstilles til 333 Hz og 30 mV.

Cr bånd ilægges.

LF voltmeter tilsluttes 20TP7 (20TP8).

Tryk »Record« en gang (Record pause).

Tryk »Programming« og derefter »Level« indtil Level indikatoren blinker en gang, og Auto indikatoren slukker.

Tonegeneratorens output reguleres til der måles 1 V.

Tonegeneratorens output dæmpes 20 dB og frekvensen ændres til 19 kHz.

20L200 (20L400) justeres til der måles 600 mV.

Tryk »Stop«.

HX Filter

Ilæg kassette for optagelse.

DC voltmeter tilsluttes 20TP3 (20TP4).

Tryk »Record« en gang. (Record pause uden signal tilført).

20L202 (20L402) justeres til minimum DC spænding.

Tryk »Stop«.

Bias filter

LF voltmeter tilsluttes 20TP6 (20TP5).

Ilæg kassette for optagelse.

Tryk »Record« REC en gang. (Record pause uden signal tilført).

20L201 (20L401) justeres til minimum spænding.

Tryk »Stop«.

Skewing

Tonegenerator indstilles til 1 kHz og 30 mV.

Ilæg kassette for optagelse.

LF voltmeter tilsluttes 20TP18 (20TP19).

Tryk »Programming« og tryk »Dolby« til DOLBY C lyser og tryk »Record« en gang. (Record pause).

Tonegeneratorens niveau finreguleres til LF voltmeteret viser »0 dB«.

Tonegeneratorens frekvens ændres til 17 kHz.

20L206 (20L406) justeres til niveauet er faldet 8,5 dB.

Tryk »Stop«.

Dolby filter

Kortslut 20TP6 (20TP5) til 20IC200 (20IC400) ben 26 via en 1nF kondensator.

Ilæg en Metal bånd kassette.

Recording boost

Set tone generator to 333 Hz and 30 mV.

Load Cr tape.

Connect AF voltmeter to 20TP7 (20TP8).

Press "Record" once (Record pause).

Press "Programming" and the "Level" until the Level indicator flash once, and the Auto indicator switches off.

Adjust tone generator's output until a reading of 1 V is obtained.

Damp the tone generator's output by 20dB and change the frequency to 19 kHz.

Adjust 20L200 (20L400) until a reading of 600 mV is obtained.

Press "Stop".

HX Filter

Connect DC voltmeter to 20TP3 (20TP4).

Load cassette for recording.

Press "Record" once. (Record pause without signal supplied).

Adjust 20L202 (20L402) to minimum DC voltage.

Press "Stop".

Bias filter

Connect AF voltmeter to 20TP6 (20TP5).

Load cassette for recording.

Press "Record" REC once. (Record pause without signal supplied).

Adjust 20L201 (20L401) to minimum voltage.

Press "Stop".

Skewing

Set tone generator to 1 kHz and 30 mV.

Load cassette for recording.

Connect AF voltmeter to 20TP18 (20TP19).

Press "Programming" and press "Dolby" until DOLBY C lights up and press "Record" once. (Record pause).

Fine adjust the tone generator's level until the AF voltmeter indicates "0 dB".

Change the tone generator's frequency to 17 kHz.

Adjust 20L206 (20L406) until the level has fallen by 8.5 dB.

Press "Stop".

Dolby filter

Short-circuit 20TP6 (20TP5) to 20IC200 (20IC400) pin 26 via a 1nF capacitor.

Load an Metal tape cassette.

LF voltmeter tilsluttes 20TP10 (20TP11).

Tryk »Record« REC en gang. (Record pause uden signal tilført).

20L205 (20L405) justeres til minimum spænding.

Tryk »Stop«.

Cr bias

CrO_2 norm bånd bestillingsnr. 6780066 ilægges.

Tonegenerator indstilles til 333 Hz og ca. 30 mV.

LF voltmeter tilsluttes 20TP10 (20TP11).

For optagelse:
Tryk »Record« en gang. (Record pause uden signal tilført).

Tryk »Programming« og derefter »Level« indtil level indikatoren blinker en gang, og Auto indikatoren slukker.

Herefter tilsluttes tonegeneratoren.

Ved henholdsvis at optage (tryk »Record« to gange) og gengive 333 Hz og 15 kHz, justeres 20R240 (20R440) indtil niveauet ved 15 kHz og 333 Hz er ens.

(Mindre bias giver diskant hæv. Mere bias giver diskant fald).

Fe bias

Gøres som Cr bias, blot skal Fe_2O_3 norm bånd bestillingsnr. 6780067 benyttes, og der justeres med 20R237 (20R437).

MP bias

Gøres som Cr bias, blot skal Metal norm bånd bestillingsnr. 6780101 benyttes, og der justeres med 20R243 (20R443).

Optagestrøm Cr

CrO_2 norm bånd bestillingsnr. 6780066 ilægges.

Tonegenerator indstilles til 333 Hz og 200 mV.

LF voltmeter tilsluttes 20TP10 (20TP11).

Ved henholdsvis at optage (tryk "Record" to gange) og gengive 333 Hz, justeres 20R227 (20R427) indtil der måles samme spænding under såvel optage som gengive.

Optagestrøm Fe

Gøres som optagestrøm Cr, blot skal Fe_2O_3 norm bånd bestillingsnr. 6780067 benyttes.

Justeringen er fælles for højre og venstre kanal og foretages med 20R48.

Optagestrøm MP

Gøres som optagestrøm Cr, blot skal Metal norm bånd bestillingsnr. 6780101 benyttes.

Connect AF voltmeter to 20TP10 (20TP11).

Press "Record" once. (Record pause without signal supplied).

Adjust 20L205 (20L405) to minimum voltage.

Press "Stop".

Cr bias

Load CrO_2 level tape part no. 6780066.

Set tone generator to 333 Hz and approx. 30 mV.

Connect AF voltmeter to 20TP10 (20TP11).

For optagelse:
Press "Record" once. (Record pause without signal supplied).

Press "Programming" and then "Level" until the level indicator flash once, and the Auto indicator switches off.

Now connect tone generator.

While recording (press "Record" twice) and playing back 333 Hz and 15 kHz respectively, adjust 20R240 (20R440) until the level is the same for 15 kHz and 333 Hz.

(Less bias will result in treble boost. More bias will result in treble cut.)

Fe bias

As for Cr bias, but Fe_2O_3 level tape part no. 6780067 must be used and the adjustment is made with 20R237 (20R437).

MP bias

As for Cr bias, but Metal level tape part no. 6780101 must be used and the adjustment made with 20R243 (20R443).

Recording current Cr

Load CrO_2 level tape part no. 6780066.

Set tone generator to 333 Hz and 200 mV.

Connect AF voltmeter to 20TP10 (20TP11).

While recording (press "Record" twice) and playing back 333 Hz, adjust 20R227 (20R427) until the same voltage is measured during both recording and playback.

Recording current Fe

As for recording current Cr, but Fe_2O_3 level tape part no. 6780067 must be used.

Adjustment is for right and left channel together and is made using 20R48.

Recording current MP

As for recording current Cr, but Metal level tape part no. 6780101 must be used.

Justeringen er fælles for højre og venstre kanal og foretages med 20R46.

Dolby koder

9 Hz Freq.
Kortslut 20TP14 til stel.

Kortslut 20TP9 til 20TP12.

Et dobbelt strålet oscilloskop stilles i X-Y og begge stråler i DC.

Den ene stråle tilsluttes 20TP13, og den anden stråle tilsluttes 20TP16.

Oscilloskopets stelledning tilsluttes 20TP17 6V REF.

NB! Jordledningen i oscilloskopets netledning må ikke være tilsluttet jord ved denne justering.

Ilæg kassette for optagelse.

Tryk »Record« 2 gange (uden signal tilført).

20R88 justeres til Lissajous figuren viser en cirkel.

Kortslutningen 20TP9 til 20TP12 fjernes.

9 Hz Ampl.
Kortslut 20P14 til stel.

Cr bånd ilægges.

LF voltmeter tilsluttes 20TP13.

Der optages et stykke på båndet, uden signal tilført (tryk »Record« to gange).

Optagelsen gengives, og 20R86 justeres til der måles 2 V RMS.

HUSK at fjerne kortslutningen i 20P14.

Opsamlemoment (Motor supply)

Ilæg moment måle kassette.

Tryk »Tape 1«

Det aflæste opsamlemoment vil svinge mellem to værdier, og 20R314 justeres til middelværdien er 45 pcm.

Føler for udløbsstop (Tape leader)

Ilæg en ikke gennemsigtig kassette uden bånd.

Der må ikke tilføres lys udefra (fra f.eks. en arbejdslampe).

DC voltmeter tilsluttes 20TP15.

Tryk tonehovedbroen ind med hånden.

20R139 justeres til 9V ±0,3 V.

Adjustment is for right and left channels together and must be made using 20R46.

Dolby codes

9 Hz Freq.
Short-circuit 20TP14 to ground.

Short-circuit 20TP9 to 20TP12.

Set double-beam oscilloscope to X-Y and both beams in DC.

Connect one beam to 20TP13 and the other to 20TP16.

Connect the ground wire of the oscilloscope to 20TP17 6V REF.

NB! During this adjustment the earth wire in the mains cable of the oscilloscope must not be connected to earth.

Load cassette for recording.

Press "Record" twice (without signal supplied).

Adjust 20R88 until Lissajous figure on the oscilloscope shows a circle.

Remove short circuit 20TP9 to 20TP12.

Adjust 1R52 until Lissajous' figure on the oscilloscope shows a circle.

9 Hz Ampl.
Short-circuit 20TP14 to ground.

Load Cr tape.

Connect AF voltmeter to 20TP13.

Record for a while on the tape without a signal being supplied (press "Record" twice).

Playback recording and adjust 20R86 until 2 V RMS is measured.

DO NOT FORGET to remove the short circuit in 20TP14.

Take-up torque (Motor supply)

Load torque measurement cassette.

Press "Tape 1".

The take-up torque reading will oscillate between two values and 20R314 must be adjusted until the mean value is 45 pcm.

Sensor for tape leader

Load a non-transparent cassette without tape.

Light must not be supplied from the outside (from, for example, a work lamp).

Connect DC voltmeter to 20TP15.

Press in the tape head base with the hand.

Adjust 20R139 to 9V ±0.3 V.

MEKANISKE JUSTERINGER CD

Kontrol af vinkel indstilling på laserarm

Vinkel indstillingen kan kontrolleres efter glasplademetoden, som er forklaret i det efterfølgende.

MECHANICAL ADJUSTMENTS CD

Checking the angle setting

The angle setting can be checked with the glass-disc method which is explained below.

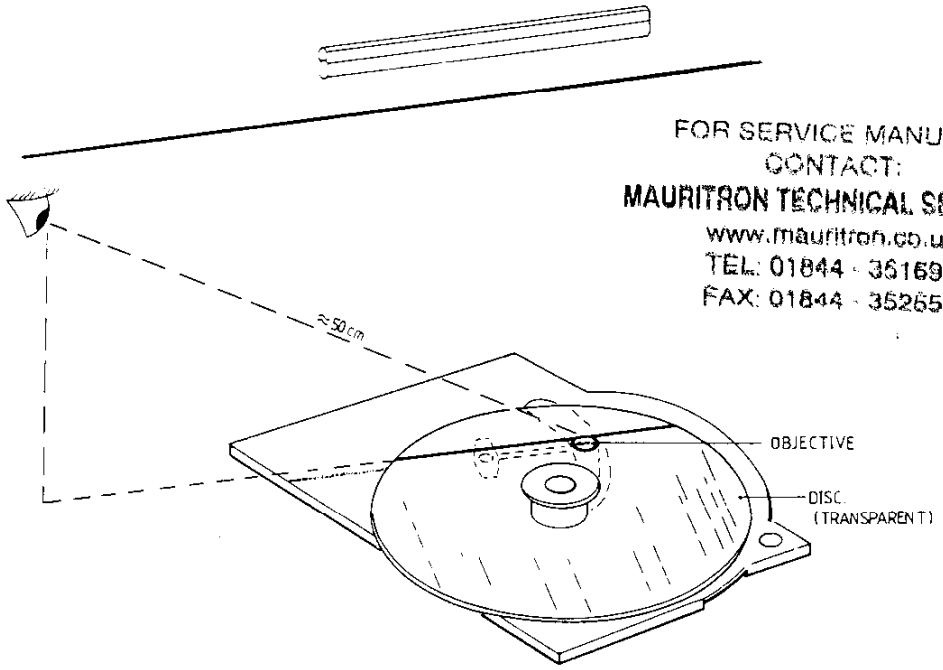

FOR SERVICE MANUALS
CONTACT:
MAURITRON TECHNICAL SERVICES
www.mauritron.co.uk
TEL: 01844 - 351694
FAX: 01844 - 352654

Læg glasplade (bestillingsnr. 3634030) på pladeholderen. Glaspladen skal hvile jævnt mod pladeholderen.

Placer CD løbeværket under en lyskilde hvorunder der er en lige linie (f.eks. et lysstofrør med gitter).

Placer laserarmen midt i dens radiale vandring.

Drej løbeværket indtil laserarmen er parallel med linien fra lyskilden.

Se i forlængelse af den reflekterede linie på henholdsvis glasplade og optik. Der må ikke være mere end 4 mm afstand mellem de 2 linier.

Placer CD løbeværket sådan at linien der reflekteres af optikket løber gennem optikkets centrum.

Hvis linien der reflekteres af glaspladen er indenfor optikkets overfalde, er vinkel indstillingen i orden.

Put glass disc part no. 3634030 on the turntable. Male sure that the glass disc beds down well on the turntable.

Place the CD mechanism under a light source, under which there is a straight line (e.g. under a fluorescent tube with grid).

Set the arm to mid-position of its radial track.

Turn the mechanism until the arm is parallel to the line under the light source (see figure below).

Look into the direction and in the extension of the line to the reflection there of on the glass disc and in the objective. These lines should not be apart more than 4 mm.

Place the CD mechanism so that the reflected line runs across the centre of the objective.

When the line that is reflected by the glass disc stays within the surface of the objective, the angle setting is correct.

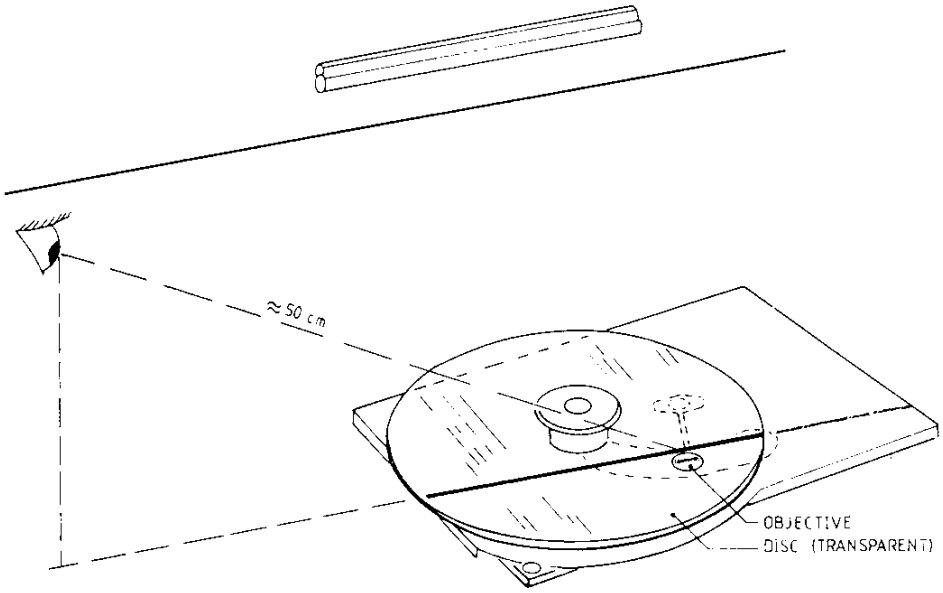

Drej CD løbeværket 90° i forhold til forrige position.

Hold laserarmen i midterposition.

Gentag ovenstående kontrol.

Justering af vinkel indstilling

Hvis kontrol af vinkel indstilling viser, at vinklen er udenfor tolerance, skal den *ikke* justeres til minimum afvigelse men blot indenfor tolerance.

Efter justering af vinkel indstilling, (se næste side), skal laserarmens friktion kontrolleres. Dette kan gøres med en trykfjedermåler, som holdes mod magneten på focusenheden.

Friktionen skal være under 25 mN gennem enhedens hele vandring.

Hvis friktionen er for høj skal RAFOC enheden udskiftes og vinkel indstillingen skal kontrolleres igen.

Turn the CD mechanism through 90° relative to the previous position.

The arm must be kept in mid-position (see figure above).

Repeat the previous check.

Adjusting the angle setting

If a check on the angle setting shows that the angle falls outside the toelerance, the angle should *not* be adjusted for minimum deviation, but it should be adjusted within the tolerance.

After adjusting the setting, the friction of the arm must be checked. This is done by means of a spring pressure gauge which is held against the magnet of the focusing unit.

The friction of the arm, measured over the entire meter reading, should not be greater than 25 mN.

When the friction appears to be too high, the CD mechanism must be replaced and the angle setting shall be checked once more.

5-12

Justering af vinkel indstilling gøres som beskrevet i det efterfølgende:

FOR SERVICE MANUALS
CONTACT:
MAURITRON TECHNICAL SERVICES
www.mauritron.co.uk
TEL: 01844 - 351694
FAX: 01844 - 352554

Adjustment of the angle setting is performed as follows:

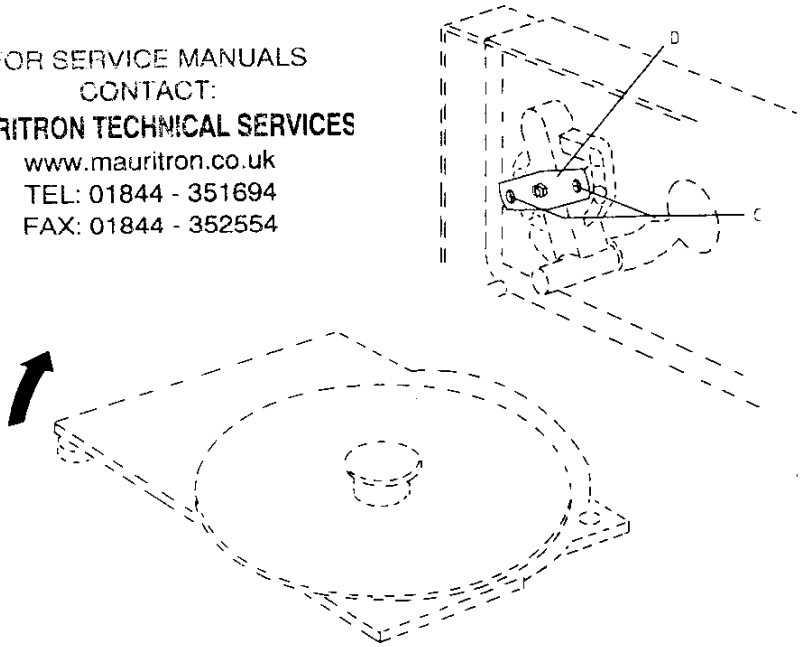

Skruerne C løsnes indtil armlejet D kan forskubbes. Vinkelindstillingen justeres ved at skubbe armlejet D som vist på nedenstående tegning.

Skruerne C spændes medens det sikres at indstillingen ikke flytter sig.

Foretag kontrol af vinkelindstilling.

Loosen screws C (see figure above) until bearing plate D can be displaced. Correct the angle setting by moving the bearing plate into the direction shown in figure below.

Tighten screws C, ensuring that the setting does not drift.

Then double check the setting in two directions.

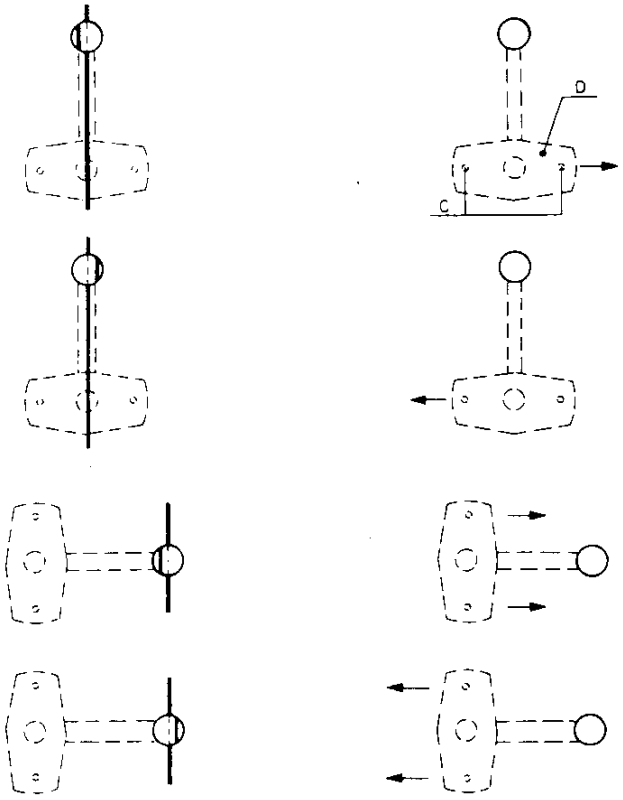

ELEKTRISKE JUSTERINGER CD

Kontrol af laserforsyning

Laseren, laserforsyningen i 30IC6101 og monitor-dioden danner et tilbagekoblings-system. En fejl i laserforsyningen kan medføre, at laseren ødelægges.

Da det er umuligt at kontrollere og reparere et tilbagekoblingssystem, hvor en af komponenterne mangler, kan nedenstående kredsløb bruges til at kontrollere laserforsyningen.

Den grønne LED udgør laseren. Spændingen over 18 ohms modstanden udgør monitor-tilbagekoblings-spændingen. 33 ohms modstanden og omskifteren gør det muligt at ændre strømforbruget fra laserforsyningen.

ELECTRICAL ADJUSTMENTS CD

Checking the laser supply

The laser, the laser supply in 30IC6101 and the monitor diode form a feed-back system. A defect in the laser supply may result in destruction of the laser.

As it is impossible to check and repair a feed-back system if one part of the system is missing, the laser supply can be checked by means of the below circuit.

The green LED replaces the laser. The voltage across the 18-ohm resistor is the feed-back voltage for the monitor. The 33-ohm resistor and the switch make it possible to change the power consumption from the laser supply.

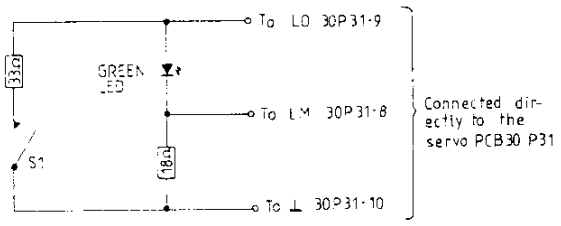

Grøn LED f.eks. CQY94 bestillingsnr. 8330054.

Fleks-printet tages ud af P31 på servo-PCB'en.

Ovenstående kredsløb loddes på P31 på servo-PCB'en.

SI (ben 20 på 30IC6101) kortsluttes til stel.

Når $\overline{SI}$ (Start initialization) er low, kan laserforsyningen tændes i service position 1, ved at kortslutte TESTMODE stikket på PCB43 kortvarigt. Tryk derefter CD, hvis låg går op så tryk LOAD CD. Tryk derefter 1.

LO-spændingen på ben 9 af 30P31 måles.

S1 afbrudt:
LO fra 1,8 V til 2,3 V
LM fra 170 mV til 220 mV
Den grønne LED lyser svagt

S1 kortsluttet:
LO fra 1,8 V til 2,3 V
LM fra 170 mV til 220 mV
Den grønne LED lyser svagt.

Når S1 skiftes fra kortsluttet til afbrudt, vil LED'en lyse kraftigere i et kort øjeblik.
Tilbagekoblingssystemet bevirker, at der går samme strøm i LED'en, hvad enten S1 er kortsluttet eller afbrudt.

Green LED, e.g. CQY94, part no. 8330054.

Remove the flex PCB from P31 on the servo PCB.

Connect the above-mentioned circuit to P31 on the servo PCB.

Connect SI (pin 20 of 30IC6101) to ground.

When $\overline{SI}$ (Start initialization) low, the laser supply can be switched on by short circuit the socket TESTMODE on PCB43 briefly. Then press CD, if CD lid opens press LOAD CD. Then press 1.

Measure the LO voltage on pin 9 of 30P31.

S1 open:
LO from 1.8 V to 2.3 V
LM from 170 mV to 220 mV
The green LED emits little light

S1 closed:
LO from 1.8 V to 2.3 V
LM from 170 mV to 220 mV The green LED emits little light.

During the change from S1 closed to S1 open, the LED will shortly emit more light than usual. The feed-back system ensures that the same amount of current passes through the LED irrespective of whether S1 is open or closed.

5-13

SERVO PCB30

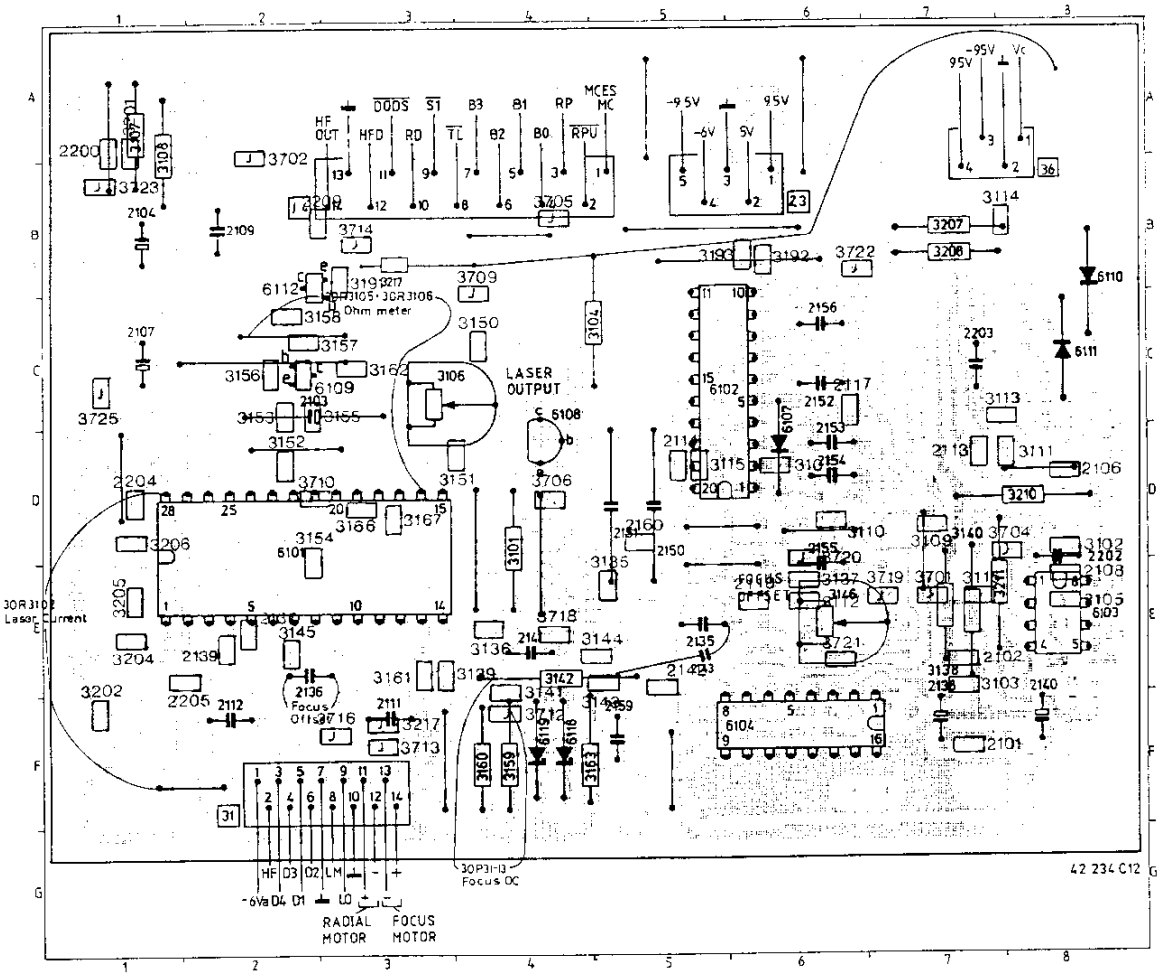

DISC MOTOR CONTROL PCB96

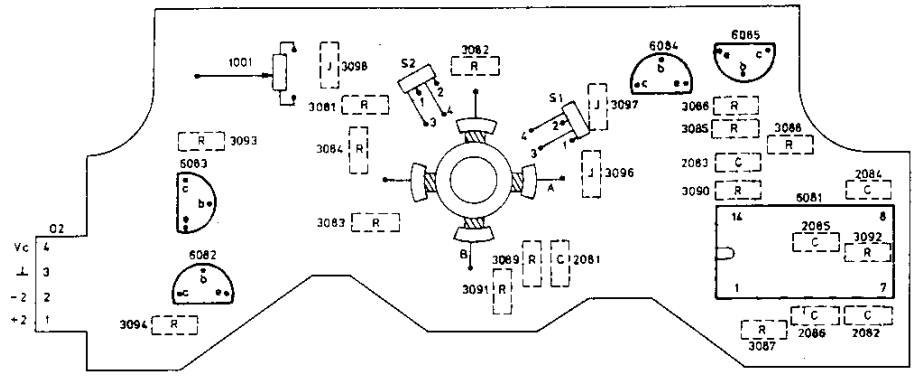

FOR SERVICE MANUALS
CONTACT:
MAURITRON TECHNICAL SERVICES
www.mauritron.co.uk
TEL: 01844 - 351694
FAX: 01844 - 352554

Laserstrøm

Vigtigt:
Efter udskiftning af CD løbeværket eller servo-PCB30 skal laserstrøm-potentiometeret 30R3106 forjusteres, inden apparatet tilsluttes lysnettet.

Tilslut et ohmmeter over 30R3105 + 30R3106. Juster 30R3106, indtil 30R3105 og 30R3106 tilsammen har en værdi på 1 kohm.

Tilslut et DC-voltmeter over 30R3102.

Tilslut et oscilloskop til ben 27 på 30IC6101.

Ilæg testplade nr. 5 (plade uden fejl, bestillingsnr. 3634031) og tryk CD.

Kontroller på oscilloskopet, om der er HF signal. Hvis der ikke er HF signal, slukkes apparatet, og fejlen findes.

Hvis der er HF signal, spilles spor 1 på testplade 5, og 30R3106 justeres, til der måles 50mV ±5mV med DC-voltmeteret.

Laser current

Important:
When replacing the CD mechanism or the servo PCB30, the laser current potentiometer 30R3106 must be preadjusted before the set is connected to mains.

Connect an ohmmeter across 30R3105 + 30R3106. Adjust 30R3106 until the combined value of 30R3105 and 30R3106 is 1 kohm.

Connect a DC voltmeter across 30R3102.

Connect an oscilloscope to pin 27 of 30IC6101.

Load test disc no. 5 (disc without faults, part no. 3634031) and press CD.

Check on the oscilloscope whether there is any HF signal. If not, switch off the CD player and locate the fault.

If there is an HF signal, play track 1 of test disc 5 and adjust 30R3106 until a reading of 50 mV ±5 mV is obtained on the DC voltmeter.

Fokus offset.

Ilæg testplade nr. 5A (bestillingsnr. 3634031).

Sæt apparatet i service-position 2 ved at kortslutte TEST MODE stikket på PCB43 kortvarigt.

Tryk CD (hvis CD låget går op, så tryk Load CD). Derefter er du tilbage i TEST MODE.

Tryk derefter 1 og 2.

Hvis displayet bliver ved med at vise -2, justeres 30R3146 til displayet viser 02.

Sæt apparatet i serviceposition 4 ved at trykke 3 og 4 (04 i displayet skal lyse, og pladen skal rotere).

Tilslut et DC-voltmeter over 30C2136.

Juster 30R3146 til der måles 400 mV ±40 mV.

Focus offset

Load test disc 5A (part no. 3634031)

Set the unit in service position 2 by short-circuiting the TEST MODE point on PCB43 briefly.

Press CD (if the CD lid opens, press Load CD). Now the device is back to TEST MODE.

Then press 1 and 2.

If -2 is displayed, adjust 30R3146 until the display shows 02.

Set the unit in service position 4 by pressing 3 and 4 (04 on the display must light and the disc rotate).

Connect a DC voltmeter across 30R2136.

Adjust 30R3146 until a reading of 400 mV ±40 mV.

FOR SERVICE MANUALS
CONTACT:
MAURITRON TECHNICAL SERVICES
www.mauritron.co.uk
TEL: 01844 - 351694
FAX: 01844 - 352554

Kontrol af disc-motor systemet

1. Afbryd Vc-forbindelsen ved at fralodde 30D6110 og 30D6111.

2. Sæt apparatet i serviceposition 1 ved at kortslutte TESTMODE stikket på PCB43 kortvarigt. Tryk derefter CD, hvis CD låg går op så tryk LOAD CD. Tryk derefter 1.

3. Tilslut negativ DC spændingsforsyning (V-in) til Vc ben 1 på 30P36. NB! Apparatet *skal* stå i service position 1 (strømforsyningen i apparatet skal være tændt) når dette gøres.

4. Mål med et oscilloskop, først over 96R3094, og derefter over 96R3093 på disc motor control PCB'en. De 2 stråler på et dobbelt strålet oscilloskop *må ikke* tilsluttes over de 2 modstande samtidig, da forsyningsspændingerne ellers kortsluttes.
   Spændingsforsyningen reguleres, indtil der ses 3 pulser med oscilloskopet på 100 mS. (se tegning).

Checking the disc motor system

1. Disconnect the Vc connection by desoldering 30D6110 and 30D6111.

2. Put the player in service position 1, by short circuit the socket TEST MODE on PCB43 briefly. Then press CD, if CD lid opens press LOAD CD. Then press 1.

3. Inject a *negative* voltage (V-in) to the VC connection (Pin 1 on 30P36).
   This voltage *may only* be injected *after* the player is put in service position 1. (The power supply in the player must be ON).

4. Measure with an oscilloscope first across 96R3094 and hereafter across 96R3093 on the disc motor PCB. Do not measure across both resistors at the same time, as this will cause short circuit of the power supplies.
   Now adjust the injected voltage in such a way that 3 complete pulses are visible during 100 mS. (See figure).

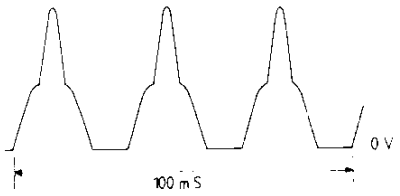

5. DC-spændingsforsyningen reguleres til -1,7 V ±0,5 V på P36-1 på servo-PCB'en.

   Reference-spænding over 96R3094 = 56,4 mVpp.
   Reference-spænding over 96R3093 = 58,8 mVpp.
   Hvis forskellen på de 2 spændinger er større end 6 mV, når spændingerne er lavere end reference-værdierne, er motoren defekt.

6.

5. Adjust the injected voltage until -1.7 ±0.5 V are present on pin 1 of P36 on the servo PCB.

   Reference voltage across 96R3094 = 56.4 mVpp.
   Reference voltage across 96R3093 = 58.8 mVpp.
   If the difference between the 2 voltage exceeds 6 mVpp, while the voltage are below the reference values, the motor is defect.

6.

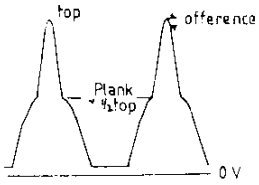

Toppen må højest variere 24 mV i amplitude.
Flanken må højest variere 35 mV i amplituden.

Top difference must not exceed 24 mVpp amplitude.
Flank difference must not exceed 36 mVpp amplitude.

7. Eksempler på pulsformer som er udtryk for fejl i disc-motor systemet:

7. Examples of wave forms when the disc motor system is faulty.

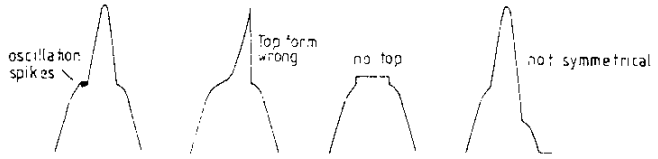

8. DC-spændingsforsyningen reguleres til 1,5 V på P36-1 på servo PCB'en.
Motoren skal stadig køre.
Pulsens amplitude falder, men pulsformen skal stadig være symmetrisk og afrundet.

8. Adjust the injected voltage until -1.5 V are present on pin 1 of P36 on the servo PCB.
The motor should keep on running.
The amplitude of the pulse will be lower, but the wave form must be symmetrical and rounded.

Kontrol af fokus-motor

Fokus-spænding

Tilslut et DC-voltmeter fra ben 13 af 30P31 til stel.

Ilæg testplade nr. 5 (plade uden fejl, bestillingsnr. 3634031) og spil spor 1.
Den målte spænding skal ligge inden for området -1,2 til +1,2 V.

Konklusion:

Hvis ovennævnte punkter kan opfyldes, er disc motor systemet i orden.

Checking the focus motor

Focus voltage

Connect a DC voltmeter from pin 13 of 30P31 to ground.

Load a test disc no. 5 (disc without faults, part no. 3634031) and play track 1. The voltage measured should be within the range from -1.2 V to +1.2 V.

Conclusion:

When all above mentioned conditions are fulfilled it may be assumed that the disc motor system is all right.

FOR SERVICE MANUALS
CONTACT:
MAURITRON TECHNICAL SERVICES
www.mauritron.co.uk
TEL: 01844 - 351694
FAX: 01844 - 352554

ADSKILLELSE

Generel serviceposition

DISMANTLING

General Servicing Position

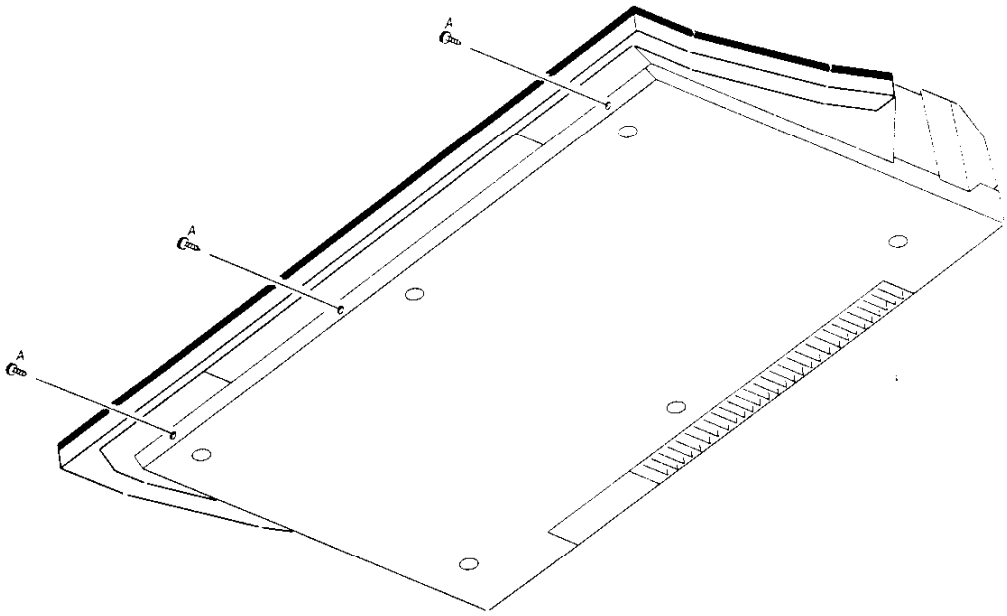

Skruerne A (3 stk) i apparatets forkant fjernes

Remove 3 screws (A) at front of set.

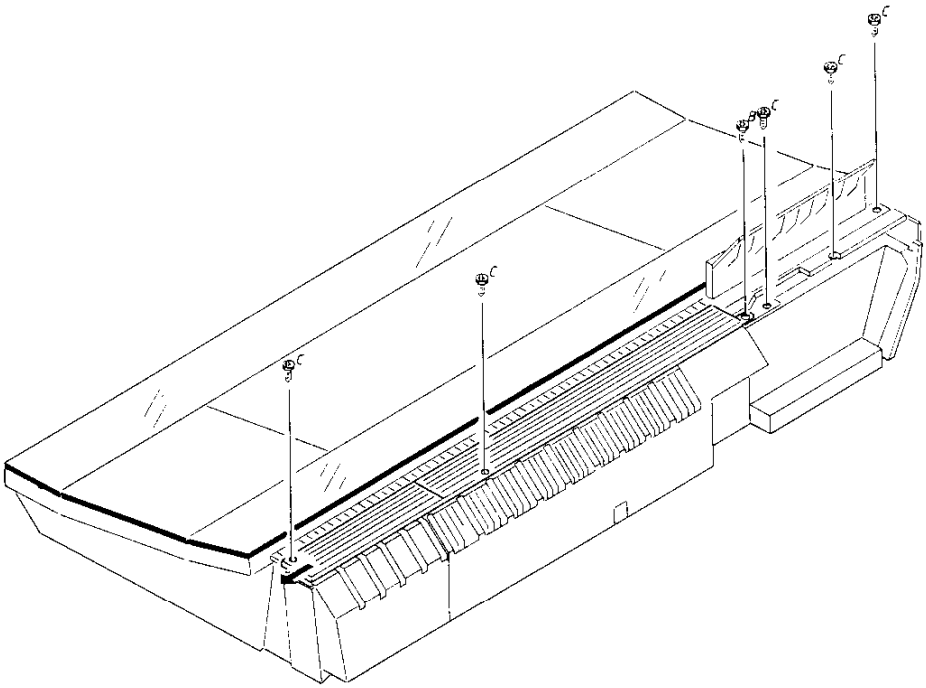

Skruen B fjernes og kølegitter skubbes mod højre og aftages.
Skruerne C fjernes (5 stk).

Remove screw B and push heat dissipation grille to left to dislodge.
Remove 5 screws (C).

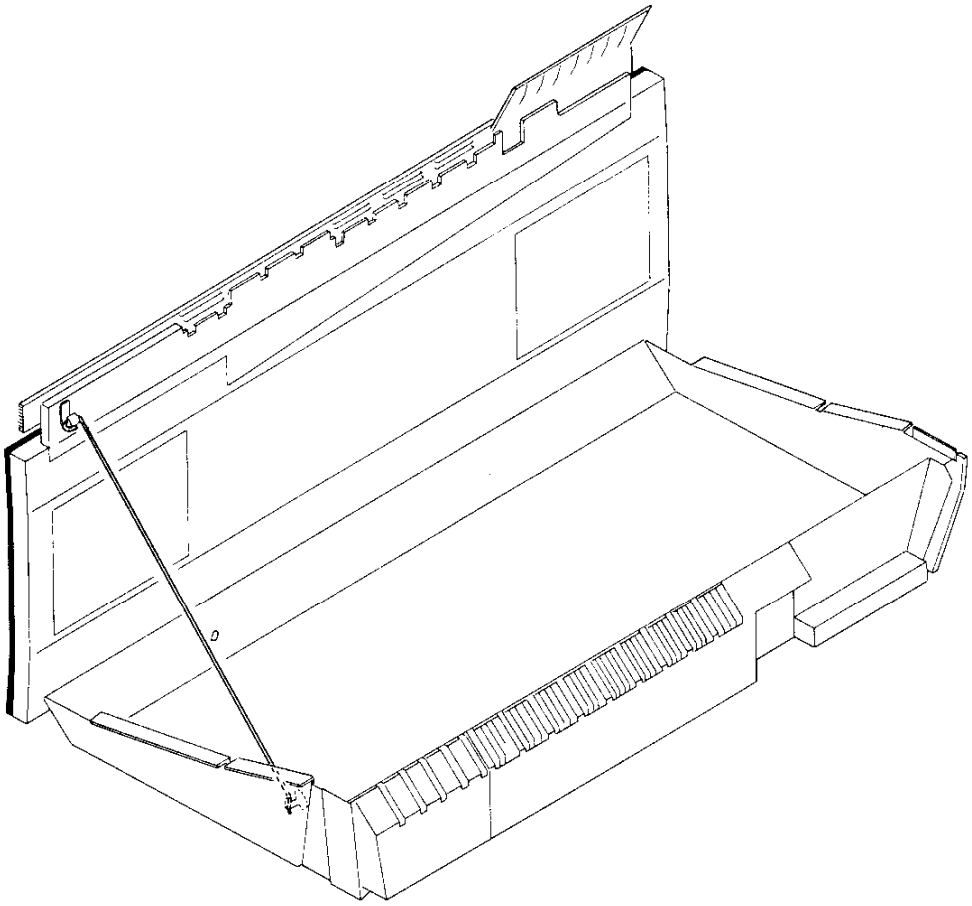

Topchassis sættes i serviceposition ved hjælp af armen D, der er placeret i topchassiset.

CD låget skal være lukket.

Place top chassis in servicing position using arm D located in top chassis.

The CD lid must be closed.

FOR SERVICE MANUALS
CONTACT:
MAURITRON TECHNICAL SERVICES
www.mauritron.co.uk
TEL: 01844 - 351694
FAX: 01844 - 352554

Serviceposition for PCB20

Servicing Position for PCB20

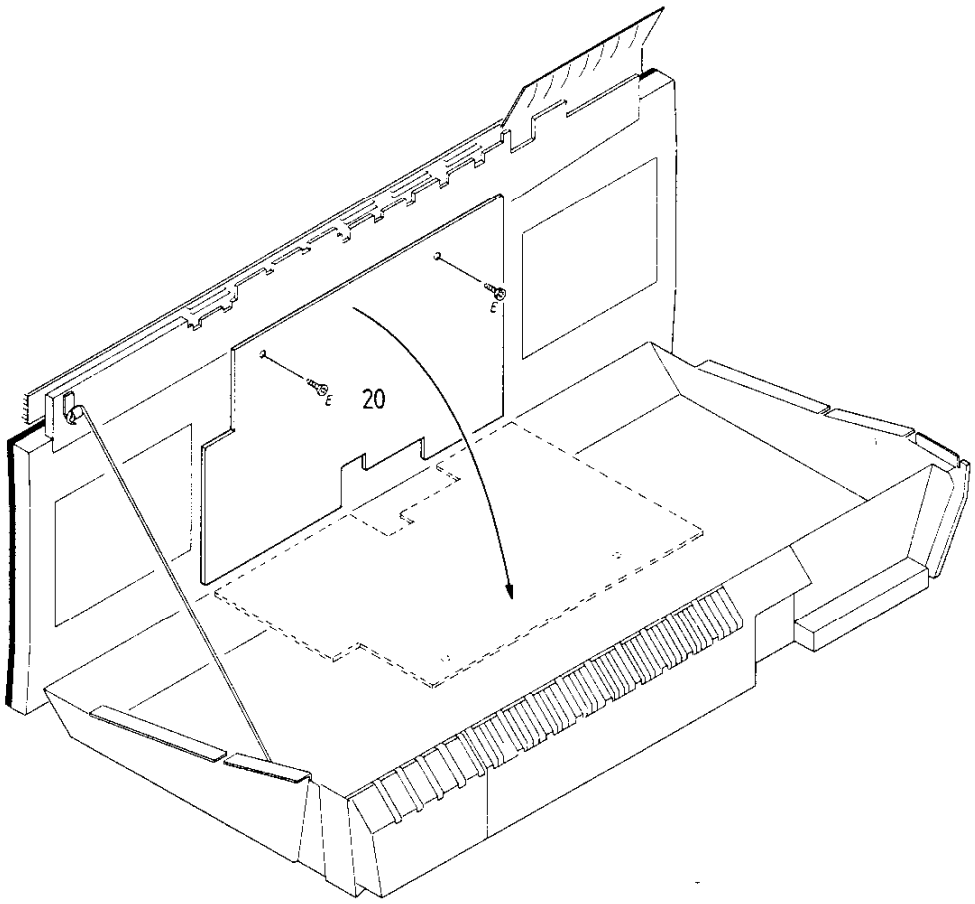

De 2 skruer E fjernes, PCB20 kan anbringes i serviceposition som vist.

Remove 2 screws (E); PCB20 can be placed in servicing position as shown.

Serviceposition for PCB60

Servicing Position for PCB60

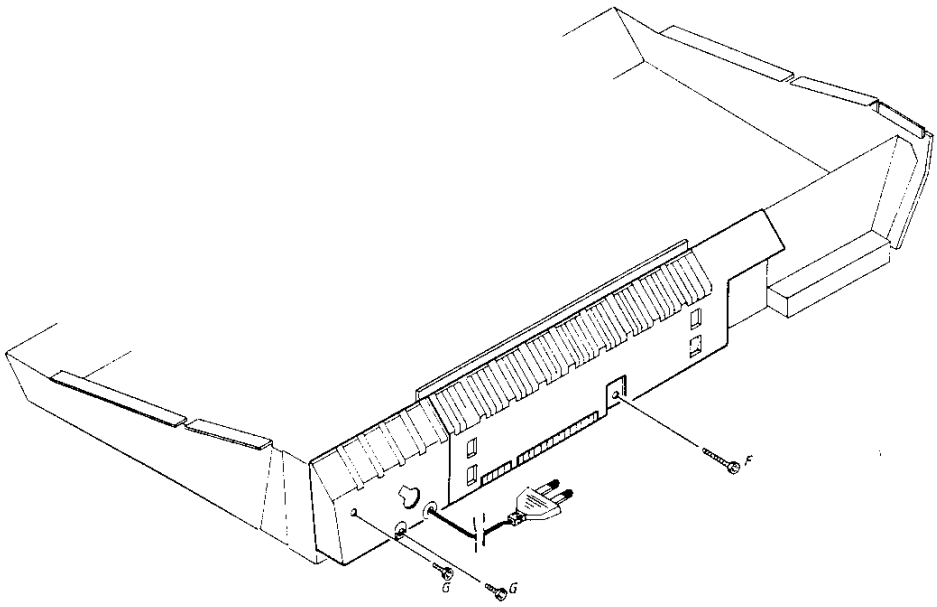

Skruen F aftages og kølepladens plastdæksel fjernes ved at trække opad.

Skruen G aftages og plastdæksel over transformator fjernes.

N.B. Pas på nettransformatorens terminaler med netspænding.

Take out screw (F) and remove plastic cover of heat dissipation panel by pulling upwards.

Take out screws (G) and remove plastic cover over transformer.

N.B. Be careful of mains voltage on terminals of network transformer.

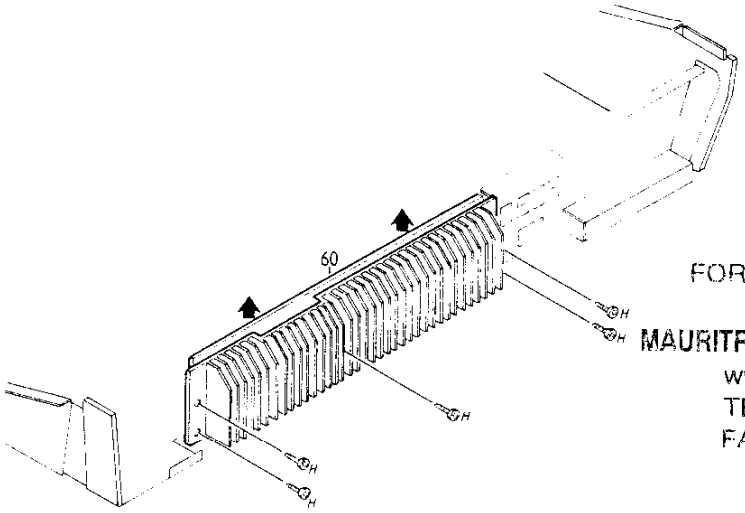

FOR SERVICE MANUALS
CONTACT:
MAURITRON TECHNICAL SERVICES
www.mauritron.co.uk
TEL: 01844 - 351694
FAX: 01844 - 352554

Skruerne H aftages og køleplade trækkes lidt op og lægges på bordet med PCB60 opad.

Remove screws (H), pulling heat dissipation panel up slightly and placing it on worktop with PCB60 facing upwards.

Serviceposition CD

Servicing Position CD

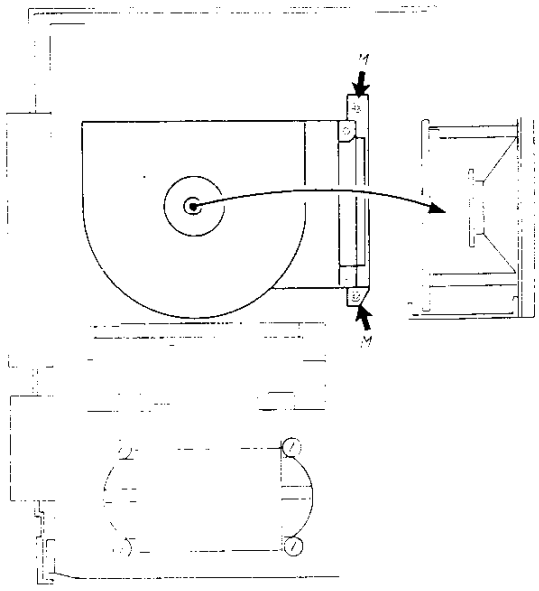

De to skruer aftages, vinkel med ophæng fjernes og CD kan trækkes ud og sættes på højkant.

Remove 2 screws (M) and angle with suspension. CD can then be pulled out and set on its edge.

Serviceposition PCB62

Servicing Position for PCB62

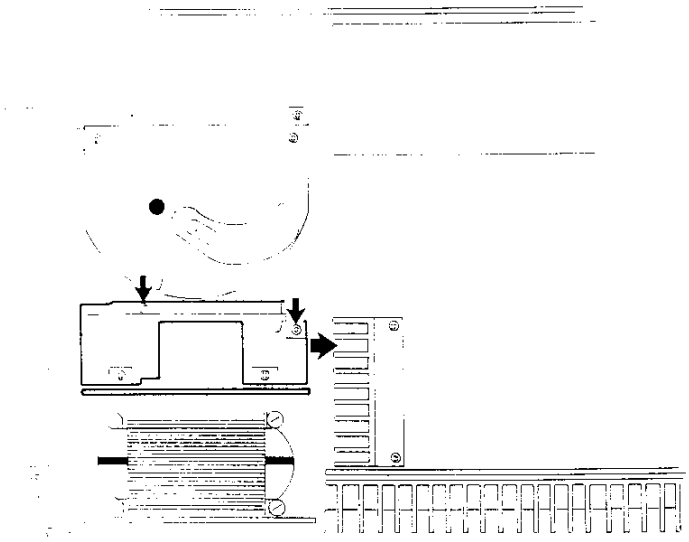

De to skruer J aftages og modulet skubbes mod højre og løftes op.

Remove 2 screws (J), push module to right and lift.

Serviceposition for Display og Keyboard PCB
(Udskiftning af glaspaneler)

Servicing Position for PCB Display and Keyboard
(Replacement of glass panels)

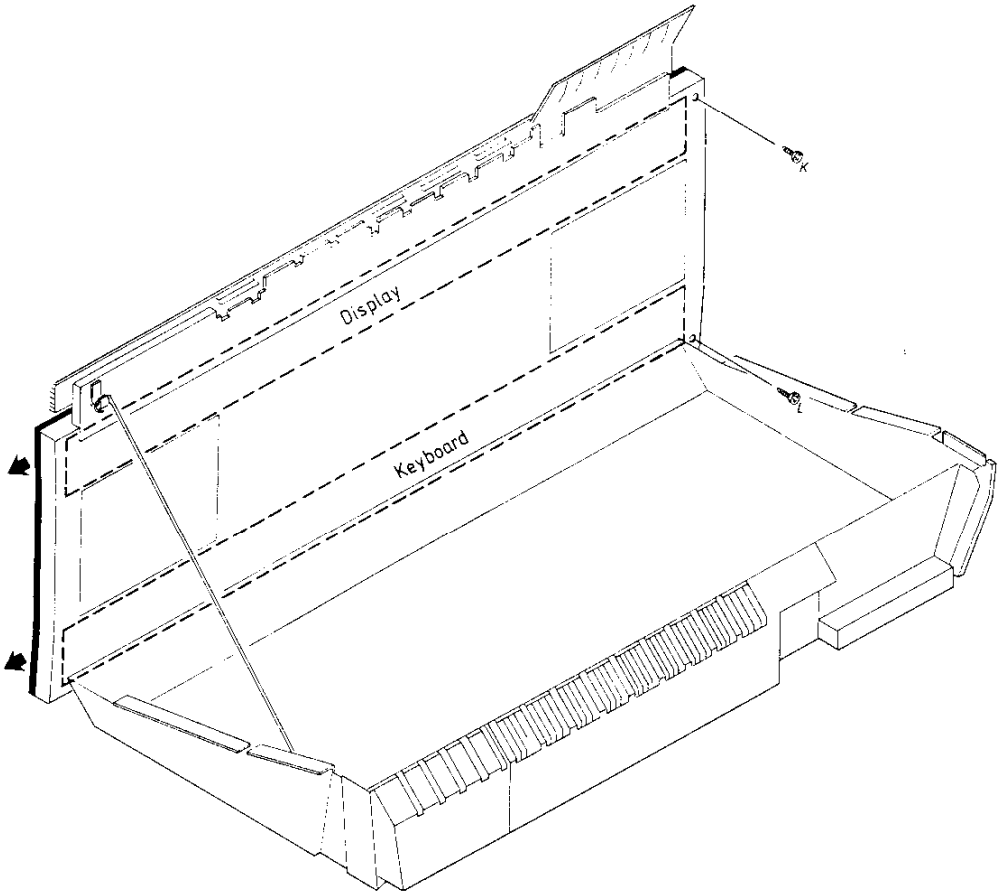

Skruen K fjernes og Display glasset skubbes mod ventre og aftages.

Skrue L fjernes og Keyboard glasset skubbes mod ventre og aftages.

PCB er nu tilgængelig for service.

Remove screw (K) and push display glass to left to dislodge.

Remove screw (L) and push keyboard glass to left to dislodge.

PCB is now assessible for servicing.

FOR SERVICE MANUALS
CONTACT:
MAURITRON TECHNICAL SERVICES
www.mauritron.co.uk
TEL: 01844 - 351694
FAX: 01844 - 352554

Serviceposition for PCB53 og 54

Servicing Position for PCB53 and 54

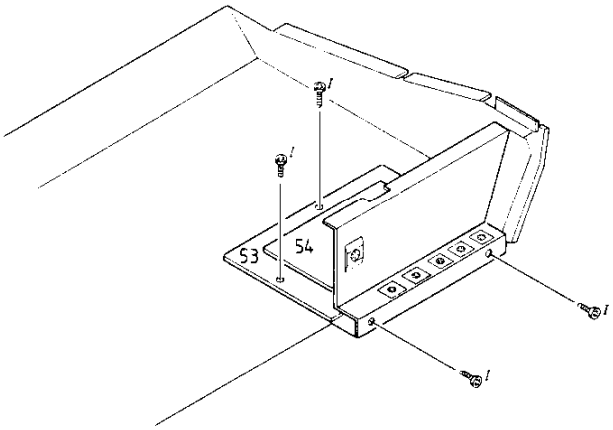

Skruerne I (4 stk) aftages og modulet tages op og sættes på højkant.

Remove 4 screws (I), lift up module and place it on its edge.

REPARATIONSTIPS

REPAIR TIPS

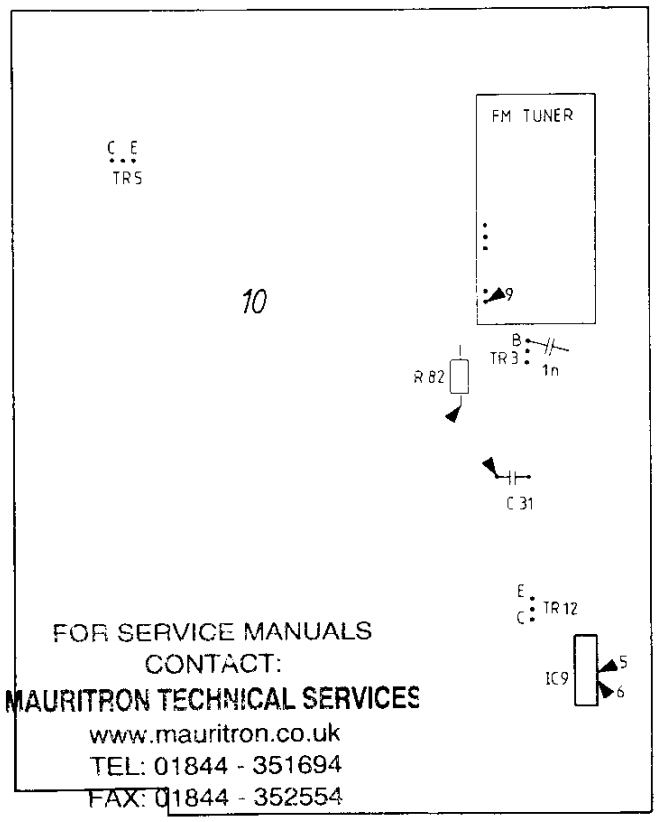

Reparation i tuningssystemet

Ved reparation i tuningssystemet kan det være vanskeligt at lokalisere en fejl.
Følgende servicetips kan benyttes til at »åbne sløjfen« mellem mikrocomputeren og resten af tunings-systemet.

1. Neddeler af oscillatorfrekvens:

Kortslut kollektor og emitter på 10TR5. Ben 9 på tuneren suges fri for tin, så der ikke er forbindelse til loddeøen.
Tilslut en målesender til basis på 10TR3 via en 1nF kondensator.
Indstil målesenderen til FM, og en frekvens på f.eks. 100,7 MHz, output større end 15mV.
Tryk »Radio«.
Tryk »Search«.
Tryk »AM-FM« til frekvensdisplayet viser 87,5.
Tryk >>.
Frekvensdisplayet skal nu vise en frekvens, der er 10,7MHz under målesenderens frekvens, i dette tilfælde 90MHz.
Frekvensdeleren deler med 400.
Kortslutningen fjernes.

Repairs in the tuning system.

When carrying out tuning system repairs, it may be difficult to localize a fault. The following service tips may be used for "opening the loop" between the microcomputer and the rest of the tuning system.

1. Oscillator frequency divider:

Short-circuit collector and emitter at 10TR5. Remove all solder from tuner pin 9 so that there is no connection to the soldering point.
Connect a signal generator to the base of 10TR3 via a 1nF capacitor.
Set the signal generator to FM and a frequency of, for example, 100.7MHz, the output being greater than 15mV.
Press "Radio".
Press "Search".
Press "AM-FM" until the frequency display shows 87.5.
Press >>.
The frequency display will now show a frequency which is 10.7MHz less than the frequency of the signal generator, i.e., 90MHz in this example.
The frequency divider divides by 400.
Remove the short-circuit.

2. Korrektion af afstemningsspænding:

Ben 9 på tuneren suges fri for tin, så der ikke er forbindelse til loddeøen.
Tilslut en målesender til basis på 10TR3 via en 1nF kondensator.
Indstil målesenderen til FM, 100,7MHz, output større end 15mV.
Tilslut et oscilloskop til 10IC9 ben 5 og ben 6.
Tilslut et DC voltmeter til kollektoren på 10TR12.
Tryk »Radio«.
Tryk »Search«.
Tryk »AM-FM« til frekvensdisplayet viser 87,5.
Tryk »Freq«.
Tryk 900.
Tryk »Manual«.
Målesenderens frekvens reguleres langsomt op.
Dette opfattes som oscillatordrift mod højere frekvens af mikrocomputeren, som så skal sende positive korrektionspulser til 10IC9 ben 5.
Reguleres der ned for målesenderens frekvens, i forhold til 100,7 MHz, skal mikrocomputeren sende positive korrektionspulser til 10IC9 ben 6.
Opregulering af frekvensen skal give faldende spænding på DC voltmeteret.
Nedregulering af frekvensen skal give stigende spænding på DC voltmeteret.

2. Correction of tuning voltage:

Remove all solder from tuner pin 9 so that there is no connection to the soldering point.
Connect a signal generator to the base of 10TR3 via a 1nF capacitor.
Set the signal generator to FM, 100.7MHz, output greater than 15mV.
Connect an oscilloscope to 10IC9 pins 5 and 6.
Connect a DC voltmeter to the collector of 10TR12.
Press "Radio".
Press "Search".
Press "AM-FM" until the frequency display shows 87.5.
Press "Freq".
Press 900.
Press "Manual".
Increase the signal generator frequency slowly.
The microcomputer understands this as oscillator drift towards higher frequency, and it therefore has to send positive correction pulses to 10IC9 pin 5.
If the signal generator frequency is decreased compared to 100.7MHz, the microcomputer has to send positive correction pulses to 10IC9 pin 6.
A frequency increase should result in decreasing voltage on the DC voltmeter.
A frequency decrease should result in increasing voltage on the DC voltmeter.

3. FM oscillator og HF:

10R82 løftes (den side af 10R82 som vender mod 10TR12 loddes fra).
En variabel DC strømforsyning tilsluttes med + til den fraloddede side af 10R82, og indstilles til 0V.
Tilslut en målsender til FM antenneindgangen.
Indstil senderen til 88MHz.
Tryk »Radio«.
Tryk »Search«.
Tryk »AM-FM« til frekvensdisplayet viser 87,5.
Tryk »Freq«.
Tryk 880.
Tryk »Manual«.
DC strømforsyningen skrues langsomt op, og når modtageren »fanger« 88MHz skal spændingen være ca. 4V.
Målesenderens frekvens ændres til 107 MHz.
Strømforsyningen skrues op, og når modtageren »fanger« frekvensen skal spændingen være ca. 19V.

3. FM oscillator and RF:

Lift 10R82 (desolder the side of 10R82 facing 10TR12).
Connect a variable DC power supply with + at the desoldered side of 10R82, and adjust to 0V.
Connect a signal generator to the FM aerial input.
Set the generator to 88MHz.
Press "Radio".
Press "Search".
Press "AM-FM" until the frequency display shows 87.5.
Press "Freq".
Press 880.
Press "Manual".
Turn up the DC power supply slowly, and when the receiver "catches" 88MHz the voltage should be approx. 4V.
The signal generator frequency is changed to 107MHz.
Turn up the power supply, and when the receiver "catches" the frequency the voltage should be approx. 19V.

4. AM oscillator og HF:

10R82 løftes (den side af 10R82 som vender mod 10TR12 loddes fra).
En variabel DC strømforsyning tilsluttes med + til den fraloddede side af 10R82, og indstilles til 0V.
Tilslut en målesender til AM antenneindgangen.
Indstil senderen til 150kHz.
Tryk »Radio«.

4. AM oscillator and RF:

Lift 10R82 (desolder the side of 10R82 facing 10TR12).
Connect a variable DC power supply with + at the desoldered side of 10R82, and adjust to 0V.
Connect a signal generator to the AM aerial input.
Set the generator to 150kHz.
Press "Radio".

Tryk »AM-FM« til frekvensdisplayet viser 150.
DC strømforsyningen skrues langsomt op, og når modtageren »fanger« 150 kHz skal spændingen være ca. 2V.
Målesenderens frekvens ændres til 350 kHz.
Strømforsyningen skrues op, og når modtageren »fanger« frekvensen skal spændingen være ca. 25V.
Samme procedure kan benyttes i mellembølgeområdet:
520 kHz spænding ca. 2V.
1610 kHz spænding ca. 25V.

Press "AM-FM" until the frequency display shows 150.
Turn up the DC power supply slowly, and when the receiver "catches" 150kHz the voltage should be approx. 2V.
The signal generator frequency is changed to 350kHz.
Turn up the power supply, and when the receiver "catches" the frequency the voltage should be approx. 25V.
The same procedure may be followed in the medium wave range:
520 kHz voltage approx. 2V.
11610 kHz voltage approx. 25V.

Manuel åbning eller lukning af låg.

Manual Opening or Closing of Cover

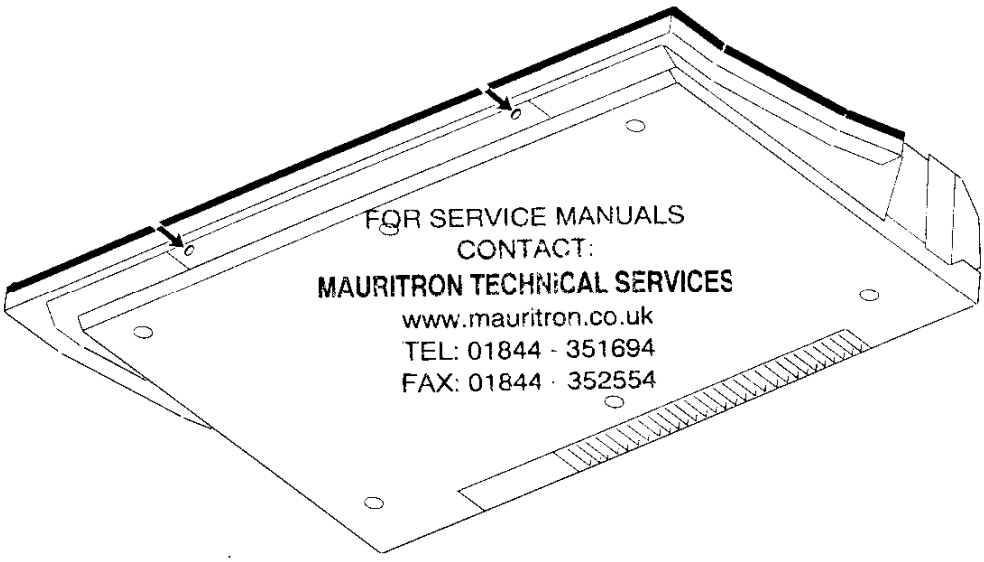

Låg over CD og TAPE kan åbnes og lukkes manuelt. Det kan være nyttigt, hvis lågfunktionen er blokeret eller apparatet ikke er tilsluttet lysnettet.
Gennem de viste huller, kan man dreje lågakselerne med en skruetrækker, og dermed åbne og lukke lågerne.

The cover over CD and TAPE can be opened and closed manually. This may be useful if the cover function is blocked or the set is not connected to the mains.
The cover axles can be rotated with a screwdriver through the holes shown, thereby opening and closing the covers.

Udskiftning af låg over CD og TAPE

Replacement of Cover and CD and TAPE

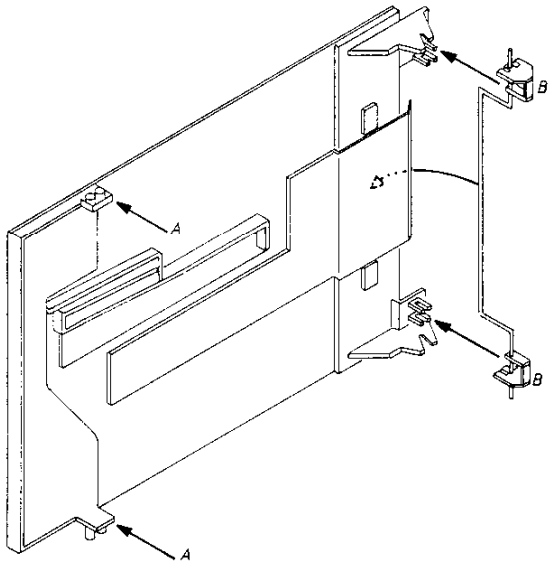

Apparatet sættes i serviceposition.
Låget åbnes og plastdækslet under låget tages ud (4 stk. plastclips (TAPE), eller 4 stk. skruer (CD).
Låget lukkes ca. 80% (kan gøres ved at dreje med lågaksel).

De to glidestyr ved pilene A løftes ud af styrespor.
Låget trækkes mod venstre.
Låget løftes fri af låsene B og kan nu tages af.

Place the set in the servicing position. Open the cover and take out the plastic lid under the cover (4 plastic clips (TAPE), or 4 screws (CD).
Close the lid approx. 80% (this can be done by rotating the cover axle).

Lift the two sliding controls at arrows A out of the control track. Pull the cover to the left.
Raise the cover clear of locks (B) and then remove.

FOR SERVICE MANUALS
CONTACT:
MAURITRON TECHNICAL SERVICES
www.mauritron.co.uk
TEL: 01844 - 351694
FAX: 01844 - 352554

Snoretræk

Cord drive

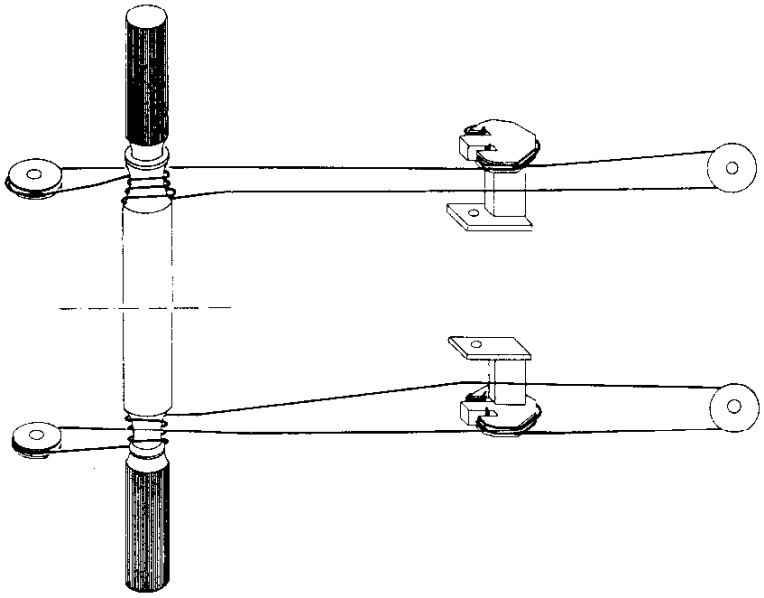

Snoretrækket for hvert låg består af 2 snorer à ca. 50 cm.

- Klem låsene B fast i låget (se 7-4).
- Bind en knude for enden af snoren.
  Læg derefter knuden i rillen på låsen.
  Træk snoren som vist på tegningen.
- Den fjederbelastede arm skal være parallel med chassiset.
  Fjederne skal sidde i det midterste af de 3 huller.

The cord drive for each cover consists of 2 cords each of approx. 50 cm.

- Fix the locks B tightly in the cover (see 7-4).
- Tie a knot before the end of the cord.
  Then place the knot in the groove on the lock.
  Pull the cord as shown in the drawing.
- The spring-loaded arm must be parallel to the chassis.
  The springs must be in the middle one of the 3 holes.

Kalkpletter på aluminiumsoverflader

Eventuelle kalkpletter på aluminiumsoverfladerne som følge af indtørrede vanddråber kan fjernes med et kalkopløsningsmiddel, f.eks. 30% eddikesyre.

Lime stains on aluminium surfaces

Lime stains on the aluminium surfaces, caused by dried water drops, can be removed by a lime dissolving solution, e.g. 30% acetic acid.

Testfunktioner

Beocenter 8500/9500 kan bringes i forskellige »testmodes« ved tage det underste displayglas af, og kortslutte stikket TESTMODE på PCB 43 i få sekunder.

Der er mulighed for:

Kontrol af lysdioder.
Test af ROM/I2C RAM.
Test af RAM.
Kommunikationstest.
Test af IR-modtager.
Sletning af RAM.
FM-displayindikering.
AM-displayindikering.
Serviceprogram CD.

Resultatet af hver test indikeres i displayet, i form af en kode. Hvis koden har form som et spørgsmålstegn, så start testen på ny.

Test Functions

The Beocenter 8500/9500 can be put into different test modes by removing the bottom display glass and short-circuiting the TEST MODE plug on PCB 43 for a few seconds.

There are facilities for:

Check LEDs.
ROM/I2C RAM test.
RAM test.
Communication test.
IR receiver test.
RAM deletion.
FM display indication.
AM display indication.
Servicing Program CD.

The result of each test is indicated in the display in the form of a code. If the code takes the form of a question mark, restart the test.

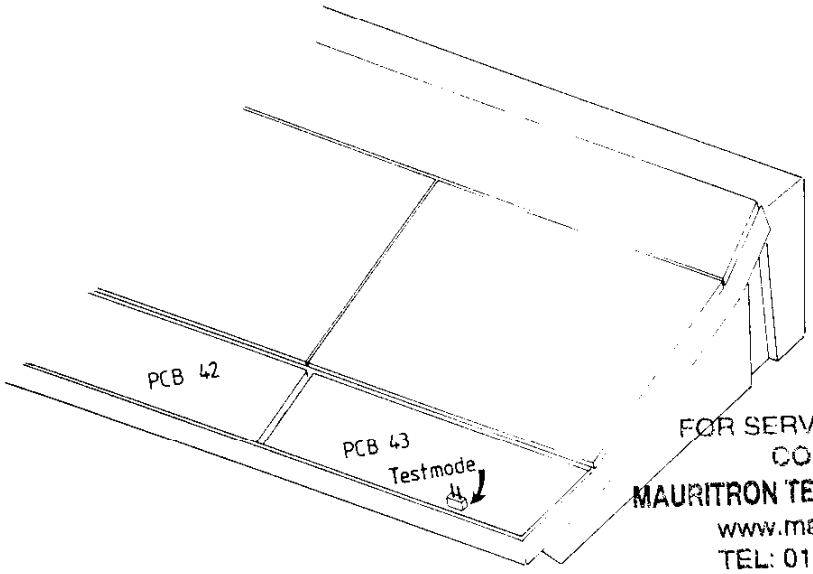

FOR SERVICE MANUALS
CONTACT:
MAURITRON TECHNICAL SERVICES
www.mauritron.co.uk
TEL: 01844 - 351694
FAX: 01844 - 352554

Lysdiodekontrol:
LED Check

Kortslut Indikering:	TESTMODE Alle lysdioder i underste panel lyser.
Short-circuit Indication:	TESTMODE All LEDs in bottom panel light up.
Tast Indikering:	PLAY Lysdioder i øverste venstre panel lyser.
Key Indication:	PLAY LEDs in top left panel light up.
Tast Indikering:	RECORD Lysdioder i øverste midterste panel lyser.
Key Indication:	RECORD LEDs in top middle panel light up.

Tast Indikering:	CALL Lysdioder i øverste højre panel og display lyser.
Key Indication:	CALL LEDs in top right panel and display light up.
Tast Key	STAND BY
ROM (40IC3) I2C/RAM (40IC4) – test: **ROM (40IC3) I2C/RAM (40IC4) – test:** Kortslut Short-circuit	 TESTMODE TESTMODE
Tast Key	5
Display 0.0 ROM/RAM i orden Display 0.0 ROM/RAM okay	E. 1, 2 eller 3 Fejl i ROM. Fejl i RAM. E. 1, 2 or 3 Error in ROM/RAM.
Tast Key	STAND BY

RAM-test intern/extern **40IC1, 40IC4, 40IC6:** Ram testes under hver opstart af 25xx fra stand by. Hvis testen findes i orden, kører opstarten i.fl.g. det valgte program.	**RAM Test internal/external** **40IC1, 40IC4, 40IC6:** RAM is tested each time 25xx is started up from stand-by. If the test is okayed, start-up proceeds according to the program selected.
Hvis der findes fejl i intern RAM (40IC1, 40IC4): If an error is located in internal RAM (40IC1, 40IC4):	Går 25xx i TESTMODE og display viser .01. 25xx goes into TEST MODE and display shows .01.
i extern RAM (40IC6): in external RAM (40IC6):	Går 25xx i TESTMODE og display viser .02. 25xx goes into TEST MODE and display shows .02.
i både intern og extern RAM (40IC1, 40IC4, 40IC6): in both internal and external RAM (40IC1, 40IC4, 40IC6):	Går 25xx i TESTMODE og display viser .03. 25xx goes into TEST MODE and display shows .03.

Hvis yderligere kontrol af mikroprocessoren er nødvendig kan følgende gøres:

40P50, P51, P52, P54, P55, P56, P57, 10P2 og IR-øje afmonteres, og PCB 40 tages ud af Beocenteren.
Tilslut en strømforsyning med +5V (500 mA) til ben 1 på 40P57 og stel på afskærmningsrammen.
Mikroprocessoren resettes ved kortvarigt at kortslutte 40P50 ben 4 til stel.
Kontroller, at der er et AC-signal tilstede på 40IC1 ben 5.
Hvis ikke resettes Beocenteren igen.

If further checking of the microprocessor is required, the following can be carried out:

Dismount 40P50, P51, P52, P54, P55, P56, P57, 10P2 and the IR eye, and remove PCB40 from the Beocenter.
Connect a +5 V (500 mA) power supply to pin 1 of 40P57 and to the screen frame chassis.
Reset the microprocessor by briefly short-circuiting 40P50 pin 4 to chassis.
Make sure that there is an AC signal on 40IC1 pin 5.
If not, reset the Beocenter again.

PCB 40 skal nu vise følgende spændinger:

PCB 40 should now have the following voltage values:

40IC1	DC	AC
Pin 1-2	–	Fig. 1
Pin 4	–	Fig. 2
Pin 5-8	–	Fig. 3
Pin 9	<0.8V	–
Pin 10	ca. 5V	–
Pin 11-12	–	Fig. 4
Pin 13-14	ca. 0V	–
Pin 15	ca. 5V	–
Pin 16-17	–	Fig. 5
Pin 18-19	–	Fig. 6
Pin 20	0V	–
Pin 21-28	–	Fig. 7
Pin 29-30	–	Fig. 8
Pin 31	0V	–
Pin 32-39	–	Fig. 9
Pin 40	+5V	–

40IC4	DC	AC
Pin 1	ca. 5V	–
Pin 2	ca. 0V	–
Pin 3-4	0V	–
Pin 5	ca. 0V	–
Pin 7	–	Fig. 7
Pin 9-10	–	Fig. 5
Pin 11	–	Fig. 8
Pin 12-19	–	Fig. 10
Pin 20	0V	–
Pin 21-22	–	Fig. 11
Pin 23	–	Fig. 14
Pin 24-25	–	Fig. 11
Pin 26-27	ca. 0V	–
Pin 28	–	Fig. 11
Pin 29-31	–	Fig. 12
Pin 32	–	Fig. 13
Pin 33-35	ca. 0V	–
Pin 36-39	ca. 5V	–
Pin 40	+5V	–

40IC6	DC	AC
Pin 1-3	ca. 0V	–
Pin 4	0V	–
Pin 5-6	–	Fig. 4
Pin 7	ca. 0V	–
Pin 8	4.5V	–

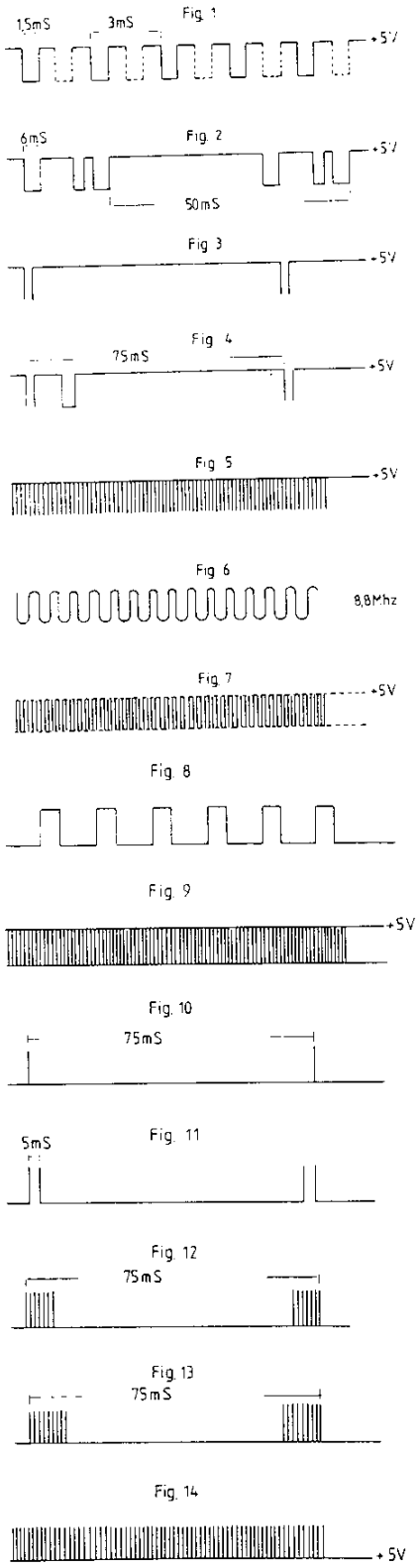

Kortslut 40P50 ben 4 til stel og samtidig skal følgende kunne måles:

Short-circuit 40P50 pin 4 to chassis, and at the same time it should be possible to measure the following values:

40IC6	DC	AC
Pin 1-3	ca. 4.5V	–
Pin 4	0V	–
Pin 5-6	ca. 5V	–
Pin 7	ca. 4.5V	–
Pin 8	4.5V	–

Fjern kortslutningen og monter PCB 40 i Beocenteren igen.

Remove the short-circuit and remount PCB40 in the Beocenter.

Kommunikationstest:

Her testes mikroprocessorens kommunikation fra processorindgange til display.
Testen udføres i STAND BY.

Kortslut TESTMODE

Ved at forbinde følgende ben, en efter en, til +5V gennem en 220 ohms modstand, skal følgende muligheder kunne aflæses på displayet, når der tastes [LEVEL]:

Communication test:

In this test the communication of the microprocessor from processor inputs to display is checked. Carry out the test in STAND BY mode.

Short-circuit TEST MODE

By connecting the following pins, one by one, to +5 V through a 220 ohm resistor, the following alternative values should be given by the display when the [LEVEL] key is pressed:

		Display Indication
40IC1	Pin 1-4	- P 0C or - P 0d
	Pin 5	no shift
	Pin 6-8	- P 0C or - P 0d
40IC4	Pin 1	- P 0C or - P 0d
	Pin 2	- P 1C or - P 1d
	Pin 5	- P 2C or - P 2d
	Pin 38	- P 0E or - P 0-
	Pin 39	- P 0C or - P 0d
	Pin 37	Units goes into Stand by

FOR SERVICE MANUALS
CONTACT:
MAURITRON TECHNICAL SERVICES
www.mauritron.co.uk
TEL: 01844 - 351694
FAX: 01844 - 352554

Kortslut TESTMODE

Ved at forbinde de samme ben en efter en til stel, kan følgende indikeringer aflæses, når der tastes [LEVEL]:

Short-circuit TEST MODE

By connecting the same pins, one by one, to chassis, the following indications will be displayed when the [LEVEL] key is pressed:

40IC1	Pin 1	F 0C or FE 0d
	Pin 2	F8 0C or F9 0d
	Pin 3	- P 0C or - P 0d
	Pin 4	- P 0C or - P 0d
	Pin 5-8	no shift
40IC1	Pin 1	- P 04 or - P 05
	Pin 2	- P 0C or - P 0d
	Pin 5	- P 0C or - P 0d
	Pin 38	- P 0C or - P 0d
	Pin 39	- P 08 or - P 09
	Pin 37	Units goes into Stand by

Test af IR-modtager:

Hertil bruges en Beolink terminal.

Tast ✉ og hold den nedtrykket.

På 40IC1 ben 3 skal der kunne måles et AC-signal, med en bredde på ca. 2msek. og en amplitude på $5V_{pp}$.

Over 40C41 (A2) skal der kunne måles ≦0,2V DC når terminalen er placeret meget tæt på modtageren. Uden ✉ knap nedtrykket skal spændingen være ≧0,3V DC.

IR receiver test:

Use an Beolink terminal for this test.

Key ✉ Press and keep depressed.

On 40IC1 pin 3 it should now be possible to measure an AC signal with a width of approx. 2 msec. and an amplitude of 5 V_{pp}.

When the terminal is positioned very close to the receiver, it should be possible to measure a voltage ≦0.2 V DC across 40C41 (A2).
If the button is not depressed, this voltage should be ≧0.3 V DC.

Kortslut Short-circuit	TESTMODE TESTMODE
Tast Key	7 RAM er hermed nulstillet. 7 RAM is now zero set.
Tast Key	STAND BY

Test af IR sender (BC 9500)

Kortslut TESTMODE

Tast 1 3

På PCB 69 P2-3 skal der kunne måles et AC signal med en bredde på ca. 0,2 msek. og en amplitude på ca. $4V_{pp.}$ v.h.a. et oscilloskop.

IR transmitter test (BC 9500)

Short-circuit TESTMODE.

Key 1 3

On PCB 69 P2-3 it should now be possible to measure on AC signal with a width of approx. 0.2 mS and an amplitude of $4V_{pp}$, with an oscilloscope.

RAM-sletning

- Sletter stations- og timerprogrammeringer.
- Nulstiller Balance, Bass, Treble og Loudness.
- Sætter Option til 1.

RAM-sletning skal foretages ved udskiftning af PCB 40.

Deleting RAM

- Deletes station and timer programming.
- Sets Balance, Bass, Treble and Loudness to zero.
- Sets Option to 1.

RAM must be deleted when replacing PCB 40.

Kortslut Short circuit	TESTMODE
Tast Key	7
Display RAM er nulstillet, option setup er 1. Display RAM is set to zero, option setup is 1.	1 1
Tast Key	STANDBY

FM-displayindikering:

Skal udføres ved udskiftning af PCB 10, båndpas-filtrene 10BP1, 10BP2 og 10BP3, eller ved indgreb i FM-detektorkredsløbet.

FM Display Indication:

Must be performed when changing PCB 10, band-pass filters 10BP1, 10BP2 and 10BP3 or when intervenning in the FM detector circuit.

Tast Key	RADIO
Tast Key	SEARCH
Tast (til display viser 87,5) Key (until 87.5 is displayed)	AM-FM AM-FM
Kortslut Short-circuit	TESTMODE TESTMODE
Tast Key	>>
Vent til Beocenteren stopper på en station (eks. 92,9 MHz) Wait until Beocenter stops on a station. (Ex. 92.9 MHz)	Display viser station Display shows station
Tast Key	RADIO
Tast Key	SEARCH
Tast Key	FREQ
Indtast den nøjagtige frekvens på den modtagne station (eks. 92,8 MHz). Enter the exact frequency of the station being received (e.g. 92.8 MHz).	9 2 8 9 2 8
Tast (inden 3 sec.) Key (Within 3 secs.)	STORE STORE
Display Display	92.8
Tast Key	STAND BY

FOR SERVICE MANUALS
CONTACT:
MAURITRON TECHNICAL SERVICES
www.mauritron.co.uk
TEL: 01844 - 351694
FAX: 01844 - 352554

AM-displayindikering

Skal udføres ved udskiftning af PCB 10, det keramiske filter 10BP4 eller ved indgreb i AM-detektorkredsløbet.

AM Display Indication

Must be performed when changing PCB 10, ceramic filter 10BP4 or when intervening in the AM detector circuit.

Tast Key	RADIO
Tast Key	SEARCH
Tast (til AM-indikering lyser) Key (until AM indication lights up)	AM-FM AM-FM
Kortslut Short-circuit	TESTMODE TESTMODE
Tast Key	FREQ
*Indtast frekvens 455 kHz *Enter frequency 455 kHz	4 5 5 4 5 5
Tast (inden 3 sek.) Key (within 3 secs.)	STORE STORE
Display Display	150 eller 520 150 or 520
Tast Key	STAND BY
*Ved udskiftning af 10BP4, indtastes den frekvens, der står på det nye keramiske filter.	*When changing 10BP4, enter the frequency given on the ceramic filter.

Serviceprogram for CD delen:

Kortslut TEST MODE.

Ilæg CD-plade, f.eks. nr. 5, (plade uden fejl, bestillingsnr. 3634031).

Servicing program for the CD-section:

Short-circuit TEST MODE.

Insert Compact Disc, ex. no. 5 (disc without faults, part no. 3634031).

Tast [CD] Key [CD]	CD starter op. CD starts up.	Hvis CD låg går op, så tast Load CD. Derefter er du tilbage i TEST MODE. If CD lid rises enter Load CD. This takes you back into TEST MODE.
Tast [1] Key [1]	Display viser 1. CD stopper, og er klar til test. Display shows 1. CD stops, and is ready for testing.	
Tast [2] Key [2]	Display viser -2. Laser tænder og søger focus. Display viser 02. Focus search ok. Display shows -2. Laser switches on and searches for focus. Display shows 02. Focus search ok.	Hvis display forbliver -2: CD søger focus i to forsøg. Tænder laser? Regulerer FE udgangen focus motoramplifier? Regulerer focusmotor? If display remains -2: CD searches for focus in two attempts. Does laser switch on? Does FE outlet regulate focus motor amplifier? Does focus motor regulate?
Tast [3] Key [3]	Display viser 03. CD motor starter, og laser går i startposition. Display shows 03. CD motor starts up, and laser drives in start position.	Hvis CD pladen ikke roterer: Starter RD udgangen turntable motoramplifier? Er MCES pulsen tilstede. If CD does not rotate: Does RD outlet start turntable? Is MCES impulse present.
Tast [4] Key [4]	Display viser -4. Radial søgning starter. Display viser 04. Radial søgning ok. Display shows -4. Radial searching is started. Display shows 04. Radial searching ok.	Hvis display forbliver -4: Regulerer RE udgangen radial motoramplifier? If display remains -4: Does RE outlet regulate radial motoramplifier.
Tast [5] Key [5]	Display viser 05. Skøjter tilbage over spor. Display shows 05. Skates back over track.	Springer over 64 spor. Skips 64 tracks.
Tast [6] Key [6]	Display viser 06. Skøjter frem over spor. Display shows 06. Skates ahead over track.	Springer over 64 spor. Skips 64 tracks.

FOR SERVICE MANUALS CONTACT:
MAURITRON TECHNICAL SERVICES
www.mauritron.co.uk
TEL: 01844 - 351694
FAX: 01844 - 352554

Ved fejl eller slitage i CD-værket, udskiftes samme (bestillingsnr. 8420148).
Såfremt serviceprogrammet ønskes *gentaget*, kan dette ske ved to gange at taste Load CD.
Serviceprogrammet afsluttes ved at taste [●].

By defects or wear and tear in the CD mechanism, it has to be replaced (part no. 8420148).
If it is desired to *repeat* the servicing program, this can be done by keying Load CD twice.
The servicing program is terminated by keying [●].

FOR SERVICE MANUALS
CONTACT:
MAURITRON TECHNICAL SERVICES
www.mauritron.co.uk
TEL: 01844 - 351694
FAX: 01844 - 352554

Oversigt over IC ben *(Dansk)*

Nedenstående skemaer er en kort beskrivelse af funktionen af de vigtigste ben på servo og decoder I
De steder hvor 2 IC'er har direkte forbindelse med hinanden, er der kun nævnt benet på den ene IC.

31IC6301 MAB 8441

PIN	BEMÆRKNINGER
21	$\overline{SI}$ (Start Initialization). Når $\overline{SI}$ er »low«, er laserforsyningen og focus-styring tændt.
7	RD (Ready). Med plade på pladeholderen vil RD forblive »high« når focus-punktet er fundet.
20	$\overline{SSM}$ (Motor Start-Stop signal). Når RD er gået »high«, vil $\overline{SSM}$ være »high« i et kort øjeblik (<0,2 sek.), og discmotor forstærkeren tændes (styret af MCES signalet).
8	B0 — Tænder radial kontrol. Styrer niveauet på radial servo DAC udgang. I søge position vil der være aktivitet på alle 4 udgange.
9	B1
10	B2
11	B3
12	$\overline{TL}$ (Track Loss). $\overline{TL}$ giver information til 5IC4 om, at tab af spor kan være forestående. 5IC4 kan så give korrektionssignaler med B0-B3.
13	RP (Radial Position). RP bestemmer laserarmens position i forhold til sporet, og korrigerer denne ved spring over spor og ved mekaniske stød mod apparatet.
22	$\overline{DODS}$ (Drop Out Detector Suppression). Når $\overline{DODS}$ er »low«, har drop out signaler ingen indflydelse på styringen af laserarmen under søg.
6	$\overline{RPU}$ (Radial Pulse). $\overline{RPU}$ aflader 30C2156 under søg. 30IC2156 virker som hukommelse for stigningsgraden på pladen.

31IC6302 SAA 7210

PIN	BEMÆRKNINGER
17	MCES (Motor Control). MCES styrer discmotorens hastighed.
25	HF (High Frequency). Indgang for HF-øje mønster. *Efter lead-in er læst
26	HFD (High Frequency Detector). HFD vil gå »low« når HF signalet er for svagt. *Ved afspilning af testplade 5A, vil HFD give »low« pulser på spor med afbrydelser og sorte pletter.
27	CEFM. Spændings-kontrolleret oscillator udgang. *Hvis pladen bremses forsigtigt med hånden, vil oscillator-frekvensen falde.
39	WS (Word Select)
38	Clock
37	Data
36	E Flag (Error Flag). Indikerer utroværdige samples for 8-sample interpolator.
30 31 29	Q RA (Q-channel Request Acknowledge). Q CL (Q Clock). Q Data Q RA initieres af 5IC4 med »high«, 5IC7 svarer med »low«. Ved forkanten på næste clock puls sættes Q RA »high« igen af 5IC4. Når 5IC4 har modtaget nok information (via Q Data), går Q RA »low«. Dette gør at Q RA tiden varierer.

k)

n kort beskrivelse af funktionen af de vigtigste ben på servo og decoder IC'erne.
lirekte forbindelse med hinanden, er der kun nævnt benet på den ene IC.

	PLAY POSITION	SERVICE POSITION 1	SERVICE POSITION 2	SERVICE POSITION 3	SERVICE POSITION 4	SI PO
). Når $\overline{SI}$ er »low«, er laserforsyningen og focus-styring tændt.	»Low«	»High«	»Low«	»Low«	»Low«	»
le på pladeholderen vil RD forblive »high« når focus-punktet er fundet.	»High«	»Low«	»High«	»High«	»High«	»I
›p signal). Når RD er gået »high«, vil $\overline{SSM}$ være »high« i et kort øjeblik ›tor forstærkeren tændes (styret af MCES signalet).	136 µS	»Low«	»Low«	136 µS	136 µS	1:
	»High«	»Low«	»Low«	»Low«	»High«	»A
l kontrol.	»High«	»High«	»High«	»High«	»High«	»A
et på radial servo DAC udgang. ›n vil der være aktivitet på alle 4 udgange.	»High«	»High«	»High«	»High«	»High«	»A
	»Low«	»Low«	»Low«	»Low«	»Low«	»A
;iver information til 5IC4 om, at tab af spor kan være forestående. 5IC4 nssignaler med B0-B3.	»High«	»High«	»Low«	»Activity«	»High«	»A
RP bestemmer laserarmens position i forhold til sporet, og korrigerer r spor og ved mekaniske stød mod apparatet.				»Activity«		»A
ector Suppression). Når $\overline{DODS}$ er »low«, har drop out signaler ingen en af laserarmen under søg.	»High«	»Low«	»Low«	»Low«	»High«	»A
:$\overline{PU}$ aflader 30C2156 under søg. 30IC2156 virker som hukommelse for aden.	»High«				»High«	»A 0.:

	PLAY POSITION	SERVICE POSITION 1	SERVICE POSITION 2	SERVICE POSITION 3	SERVICE POSITION 4	SE PO
l). MCES styrer discmotorens hastighed.	A_1/A_2	A_2	A_2	A_1/A_2	A_1/A_2	A
Indgang for HF-øje mønster.	B (Stable)			B (Unstable)	B* (Stable)	»A
/ Detector). HFD vil gå »low« når HF signalet er for svagt. plade 5A, vil HFD give »low« pulser på spor med afbrydelser og sorte	»High«*				»High«	»A
ntrolleret oscillator udgang. forsigtigt med hånden, vil oscillator-frekvensen falde.	4.32 MHz*	2.82 MHz	2.82 MHz	4.32 MHz*	4.32 MHz*	4.3:
	D			D	D	
	D			D	D	
	»Activity«				»Activity«	»A
ıdikerer utroværdige samples for 8-sample interpolator.						»Act
ıest Acknowledge).	F F F				F F F	
med »high«, 5IC7 svarer med »low«. Ved forkanten på næste clock puls en af 5IC4. ·t nok information (via Q Data), går Q RA »low«. Dette gør at Q RA tiden						

'erne.

PLAY POSITION	SERVICE POSITION 1	SERVICE POSITION 2	SERVICE POSITION 3	SERVICE POSITION 4	SEARCH POSITION
»Low«	»High«	»Low«	»Low«	»Low«	»Low«
»High«	»Low«	»High«	»High«	»High«	»High«
136 µS	»Low«	»Low«	136 µS	136 µS	136 µS
»High«	»Low«	»Low«	»Low«	»High«	»Activity«
»High«	»High«	»High«	»High«	»High«	»Activity«
»High«	»High«	»High«	»High«	»High«	»Activity«
»Low«	»Low«	»Low«	»Low«	»Low«	»Activity«
»High«	»High«	»Low«	»Activity«	»High«	»Activity«
			»Activity«		»Activity«
»High«	»Low«	»Low«	»Low«	»High«	»Activity«
»High«				»High«	»Activity« 0.1 mS/ Div.

FOR SERVICE MANUALS
CONTACT:
MAURITRON TECHNICAL SERVICES
www.mauritron.co.uk
TEL: 01844 - 351694
FAX: 01844 - 352554

PLAY POSITION	SERVICE POSITION 1	SERVICE POSITION 2	SERVICE POSITION 3	SERVICE POSITION 4	SEARCH POSITION
A_1/A_2	A_2	A_2	A_1/A_2	A_1/A_2	A_1/A_2
B (Stable)			B (Unstable)	B* (Stable)	»Activity«
»High«*				»High«	»Activity«
4.32 MHz*	2.82 MHz	2.82 MHz	4.32 MHz*	4.32 MHz*	4.32 MHz
D			D	D	D
D			D	D	D
»Activity«				»Activity«	»Activity«
					»Activity«
F F F				F F F	

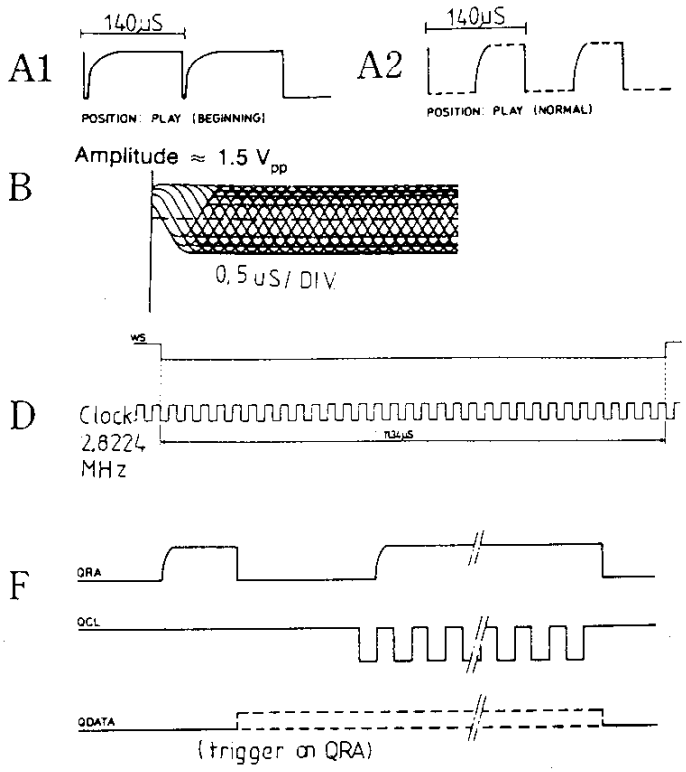

7-16

(Dansk)

PIN	BEMÆRKNINGER	PLAY POSITIO:
33 35 34	SW (Subcode Word clock). SC (Subcode Clock). SD (Subcode DATA) Efter Motor Start Pulse vil Subcode Word Clock være synlig. Medens en burst på 10 clock pulser er synlig på SC, overføres Q-channel information på SD. Herefter følger P-bit indikation. P-bit indikationen kommer mellem 2 bursts på 10 clock pulser. Ved pause er P-bit indikationen »high« og ved musik er den »low«.	G
28	$\overline{CRI}$ (Counter Reset Inhibit). $\overline{CRI}$ er »low« ved spring over spor.	»High«
32	$\overline{DEEM}$ (Deemphasis). »Low« ved afspilning af testplade 5 spor 14. »High« ved afspilning af testplade 5 spor 15.	
19	OSC. Indgang fra krystal oscillator.	11.28 MH
11	$\overline{MUTE}$. Muter audio signalet	»High«
22	PD/OC (Phase Detector/Oscillator Control). Pulser fra fasedetektorens udgang integreres og regulerer oscillatorfrekvensen.	
23	IREF. Strøm reference til fasedetektoren.	
24	FB (Feed Back). Fastholder data slicerens arbejdspunkt.	

31IC6304 SAA 7220

PIN	BEMÆRKNINGER	PLAY POSITION
18 16 15	WS (Word Select) Clock Data	I - - - - »Activity«
22	$\overline{ATSB}$ (Attenuation Audio Signal). Ved »low« dæmpes signalet 12 dB.	
23	$\overline{MUSB}$ (Soft Mute). $\overline{MUSB}$ er »low« ved spring fra et spor til et andet. *Vil være »high« ved søgning i serviceposition 4.	»High«
14	DOBM (Digital Output). Fejlkorrigeret audio og subcode data.	

FOR SERVICE MANUALS
CONTACT:
MAURITRON TECHNICAL SERVICES
www.mauritron.co.uk
TEL: 01844 - 351694
FAX: 01844 - 352554

	PLAY POSITION	SERVICE POSITION 1	SERVICE POSITION 2	SERVICE POSITION 3	SERVICE POSITION 4	SEAR POSIT
;).	G			G	G	
·il Subcode Word Clock være synlig. ·lock pulser er synlig på SC, overføres Q-channel information på SD. kation. er mellem 2 bursts på 10 clock pulser. Ved pause er P-bit indikationen len »low«.						
›it). $\overline{CRI}$ er »low« ved spring over spor.	»High«				»High«	»Activ
ow« ved afspilning af testplade 5 spor 14. testplade 5 spor 15.						
oscillator.	11.28 MHz	11.28 MHz			11.28 MHz	
ıalet	»High«				»High«	»Hig
'Oscillator Control). ıs udgang integreres og regulerer oscillatorfrekvensen.						
fasedetektoren.						
ler data slicerens arbejdspunkt.						

	PLAY POSITION	SERVICE POSITION 1	SERVICE POSITION 2	SERVICE POSITION 3	SERVICE POSITION 4	SEAR POSIT
	I	I	I	I	I	I
	»Activity«	»Stable«	»Stable«	»Stable«	»Activity«	»Activ
› Signal). Ved »low« dæmpes signalet 12 dB.						
$\overline{B}$ er »low« ved spring fra et spor til et andet. ıing i serviceposition 4.	»High«				»High«	*»Lo
Fejlkorrigeret audio og subcode data.						

PLAY POSITION	SERVICE POSITION 1	SERVICE POSITION 2	SERVICE POSITION 3	SERVICE POSITION 4	SEARCH POSITION
G			G	G	
»High«				»High«	»Activity«
1.28 MHz	11.28 MHz			11.28 MHz	
»High«				»High«	»High«

G

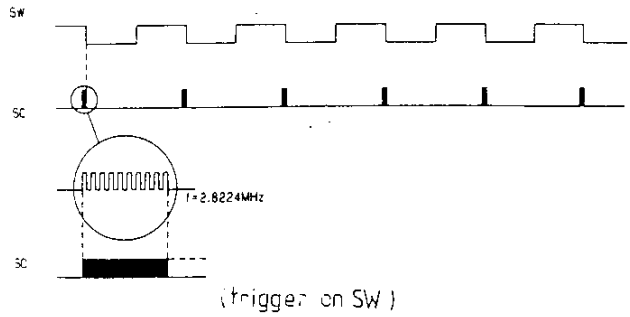

PLAY POSITION	SERVICE POSITION 1	SERVICE POSITION 2	SERVICE POSITION 3	SERVICE POSITION 4	SEARCH POSITION
I	I	I	I	I	I
Activity«	»Stable«	»Stable«	»Stable«	»Activity«	»Activity«
»High«				»High«	*»Low«

I

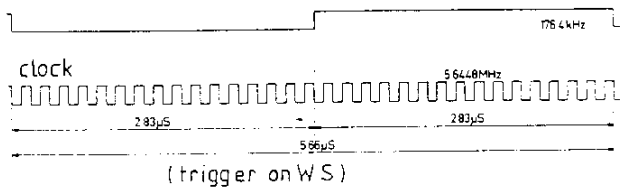

FOR SERVICE MANUALS
CONTACT:
MAURITRON TECHNICAL SERVICES
www.mauritron.co.uk
TEL: 01844 - 351694
FAX: 01844 - 352554

30IC6101 TDA 5708 (Focus Servo) *(Dansk)*

PIN	BEMÆRKNINGER	PLAY POSITION
17	LO (Laser Out).	»High«
16	LM (Laser Monitor) Via LM styres strømforsyningen til laser dioden.	200 mV ±50 mV
5	FE (Focus Error). FE styrer focus enheden. Når $\overline{SI}$ går »high« søges der efter focus punktet. Når apparatet sættes i serviceposition 2 uden plade, vil optikket søge efter focus punktet. På ben 5 vil FE signalet variere mellem 0 V og +4 V.	
9 10 8 7	D1 D2 D3 D4 D1→D4 er korrektionssignaler for fotodiode kredsløbet. Hvis pladen bevæges når apparatet er i serviceposition 2, skal focusenheden holde focus. Når pladen bevæges, skal der være varierende signaler på ben 7, 8, 9 og 10.	
3	HF (High Frequency). HF information fra de 4 fotodioder.	
27	HF out (High Frequency out). HF out er et forstærket informationssignal til decoderen. *Efter lead-in er læst.	B (Stable)
26 19 18	DET (Detector). HFD (High Frequency DETECTOR). $\overline{TL}$ (Track Loss). DET giver information om HF signalets niveau til niveau/drop-out detektoren i 30IC6101. Når HF signalets niveau er for lavt, vil HFD gå »low«. $\overline{TL}$ vil så gå »low« som information til 5IC4 om at sporings signalerne er upålidelige.	
11 12	RE1 (Radial Error). RE1-2 er styresignaler til sporing af laseren. RE2	
25	SC (Start Capacitor). *Stiger til +5 V hvis focus-punktet er fundet.	
6	FE lag (Focus Error). *Når pladen bevæges, vil signalet variere.	
13	AGC. *Ved maksimum HF signal ≦-400 mV. Ved ingen HF signal +5 V.	*

30IC6102 TDA 5709 (Radial Servo)

PIN	BEMÆRKNINGER	PLAY POSITION	P
10	DAC (Digital to Analogue Converter). DAC styrer hastigheden på spring over spor. Signalet er genereret af B0-B3. *Når man banker forsigtigt på apparatet vil der være aktivitet.	*	
7	RE (Radial Error). RE holder lyspletten på sporet. *En 650 Hz sinus vil være synlig i RE signalet.	*	
8	RE lag (Radial error for lag network). 30C2156 i RE lag kredsløbet har en hukommelses-funktion. Den husker stigningsgraden på pladen. Når der springes til et givet spor på pladen, skal denne hukommelse tømmes. Det gøres med 5IC4 via 30TR6109. *En 650 Hz sinus vil være synlig i RE lag signalet.	*	
4	D factor. (Offset control). Typisk 0V.	Min.Gain -2.5V	
5	K factor. (Gain control). Typisk -1V/-1.5V.	Max.Gain -0.5V	

o) *(Dansk)*

	PLAY POSITION	SERVICE POSITION 1	SERVICE POSITION 2	SERVICE POSITION 3	SERVICE POSITION 4	SEARCH POSITION
	»High«	»Low«	»High«	»High«	»High«	»High«
styres strømforsyningen til laser dioden.	200 mV ±50 mV		200 mV ±50 mV			
ocus enheden. fter focus punktet. eposition 2 uden plade, vil optikket søge efter focus punktet. re mellem 0 V og +4 V.						
ssignaler for fotodiode kredsløbet. når apparatet er i serviceposition 2, skal focusenheden holde æges, skal der være varierende signaler på ben 7, 8, 9 og 10.						
rmation fra de 4 fotodioder.						
. HF out er et forstærket informationssignal til decoderen.	B (Stable)			B (Unstable)	B* (Stable)	
CTOR). F signalets niveau til niveau/drop-out detektoren i 30IC6101. r lavt, vil HFD gå »low«. $\overline{TL}$ vil så gå »low« som information til ne er upålidelige.						
styresignaler til sporing af laseren.					J	
il +5 V hvis focus-punktet er fundet.		-5 V	*	+5 V	+5 V	
aden bevæges, vil signalet variere.			*	Approx. 100 mVpp		
nal ≦-400 mV. Ved ingen HF signal +5 V.	*	»High«	»High«	*	*	

vo)

	PLAY POSITION	SERVICE POSITION 1	SERVICE POSITION 2	SERVICE POSITION 3	SERVICE POSITION 4	SEARCH POSITION
nverter). DAC styrer hastigheden på spring over spor. 3. apparatet vil der være aktivitet.	*			»Low«	*	»Activity«
lyspletten på sporet. nlig i RE signalet.	*				*	
etwork). 30C2156 i RE lag kredsløbet har en hukommelses- sgraden på pladen. Når der springes til et givet spor på pladen, mes. Det gøres med 5IC4 via 30TR6109. nlig i RE lag signalet.	*				*	
isk 0V. k -1V/-1.5V.	Min.Gain -2.5V Max.Gain -0.5V	+4		-0.5V	-1V/-1.5V	

PLAY POSITION	SERVICE POSITION 1	SERVICE POSITION 2	SERVICE POSITION 3	SERVICE POSITION 4	SEARCH POSITION
»High«	»Low«	»High«	»High«	»High«	»High«
200 mV ±50 mV		200 mV ±50 mV			
B (Stable)			B (Unstable)	B* (Stable)	
				J	
	-5 V	*	+5 V	+5 V	
		*	Approx. 100 mVpp		
*	»High«	»High«	*	*	

B

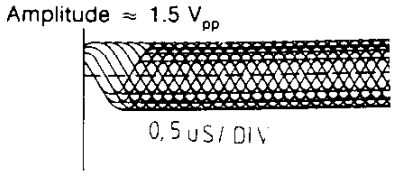

J

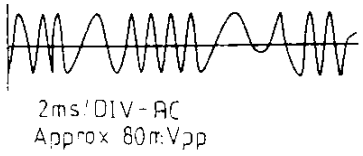

PLAY POSITION	SERVICE POSITION 1	SERVICE POSITION 2	SERVICE POSITION 3	SERVICE POSITION 4	SEARCH POSITION
*			»Low«	*	»Activity«
*				*	
*				*	
Min.Gain -2.5V Max.Gain -0.5V	+4		-0.5V	-1V/-1.5V	

FOR SERVICE MANUALS
CONTACT:
MAURITRON TECHNICAL SERVICES
www.mauritron.co.uk
TEL: 01844 - 351694
FAX: 01844 - 352554

IC pin survey *(English)*

The following surveys briefly describes the function of the most important pins of the servo and decoder Where 2 IC's are directly connected, only the pin of one IC is mentioned.

31IC6301 MAB 8441

PIN	REMARKS	PO
21	$\overline{SI}$ (Start Initialization). When $\overline{SI}$ is 'low' the laser supply and the focus control are switched on.	»
7	RD (Ready). With a disc on the turntable, RD stays 'high', when the focal point has been found.	»
20	$\overline{SSM}$ (Motor Start-Stop signal). After the RD has passed to 'high', the $\overline{SSM}$ will be high for a short moment (<0.2 sec.) and the disc motor amplifier will be switched on (controlled by the MCES signal).	1
8	B0 — Switches on the radial control. Controls the level on the radial servo DAC output. In search mode, there should be activity on all 4 pins.	»
9	B1	»
10	B2	»
11	B3	»
12	$\overline{TL}$ (Track Loss). $\overline{TL}$ tells 5IC4 that track loss may be imminent. 5IC4 can give correction signals with B0-B3.	»
13	RP (Radial Position). RP determines the position of the arm relative to the track and it corrects this in case of track jumping or bumping against the player	
22	$\overline{DODS}$ (Drop Out Detector Suppression). When $\overline{DODS}$ is 'low', drop-out signals do not influence the arm control during track search.	»
6	$\overline{RPU}$ (Radial Pulse). During track search, $\overline{RPU}$ clears 30C2156. 30C2156 memorizes the degree of inclination of the disc.	»

FOR SERVICE MANUALS
CONTACT:
MAURITRON TECHNICAL SERVICES
www.mauritron.co.uk
TEL: 01844 - 351694
FAX: 01844 - 352554

31IC6302 SAA 7210

PIN	REMARKS	PO
17	MCES (Motor Control). MCES controlls the speed of the turntable motor.	A
25	HF (High Frequency). HF eye pattern input. *After lead-in has been read.	(S
26	HFD (High Frequency Detector). HFD will go 'low' when the HF signal is too low. *When playing test disc 5A, HFD will make low pulses on track numbers with interruption or black dots.	»I
27	CEFM. Voltage-controlled oscillator output. *When the disc is slowly braked by hand, the oscillator will lower its frequency.	4.3
39	WS (Word Select)	– –
38	Clock	– –
37	Data	»A
36	E Flag (Error Flag). Indicates untrustworty samples for the 8 sample interpolator.	

 7-18

describes the function of the most important pins of the servo and decoder IC's.
nected, only the pin of one IC is mentioned.

	PLAY POSITION	SERVICE POSITION 1	SERVICE POSITION 2	SERVICE POSITION 3	SERVICE POSITION 4	SEA POSI
When $\overline{SI}$ is 'low' the laser supply and the focus control are switched on.	»Low«	»High«	»Low«	»Low«	»Low«	»L
: on the turntable, RD stays 'high', when the focal point has been found.	»High«	»Low«	»High«	»High«	»High«	»Hi
signal). After the RD has passed to 'high', the $\overline{SSM}$ will be high for a c.) and the disc motor amplifier will be switched on (controlled by the	136 µS	»Low«	»Low«	136 µS	136 µS	136
	»High«	»Low«	»Low«	»Low«	»High«	»Act
e radial control.	»High«	»High«	»High«	»High«	»High«	»Act
vel on the radial servo DAC output.	»High«	»High«	»High«	»High«	»High«	»Act
e, there should be activity on all 4 pins.	»Low«	»Low«	»Low«	»Low«	»Low«	»Act
lls 5IC4 that track loss may be imminent. 5IC4 can give correction	»High«	»High«	»Low«	»Activity«	»High«	»Act
P determines the position of the arm relative to the track and it corrects mping or bumping against the player				»Activity«		»Act
ctor Suppression). When $\overline{DODS}$ is 'low', drop-out signals do not rol during track search.	»High«	»Low«	»Low«	»Low«	»High«	»Act
ıring track search, $\overline{RPU}$ clears 30C2156. 30C2156 memorizes the degree sc.	»High«				»High«	»Act 0.1 I

	PLAY POSITION	SERVICE POSITION 1	SERVICE POSITION 2	SERVICE POSITION 3	SERVICE POSITION 4	SE POS
). MCES controlls the speed of the turntable motor.	A_1/A_2	A_2	A_2	A_1/A_2	A_1/A_2	A_1
HF eye pattern input. read.	B (Stable)			B (Unstable)	B* (Stable)	»Ac
Detector). HFD will go 'low' when the HF signal is too low. c 5A, HFD will make low pulses on track numbers with interruption or	»High«*				»High«	»Ac
led oscillator output. ly braked by hand, the oscillator will lower its frequency.	4.32 MHz*	2.82 MHz	2.82 MHz	4.32 MHz*	4.32 MHz*	4.32
	D			D	D	
	D			D	D	
	»Activity«				»Activity«	»Ac
dicates untrustworty samples for the 8 sample interpolator.						»Ac

r IC's.

PLAY OSITION	SERVICE POSITION 1	SERVICE POSITION 2	SERVICE POSITION 3	SERVICE POSITION 4	SEARCH POSITION
»Low«	»High«	»Low«	»Low«	»Low«	»Low«
»High«	»Low«	»High«	»High«	»High«	»High«
136 µS	»Low«	»Low«	136 µS	136 µS	136 µS
»High«	»Low«	»Low«	»Low«	»High«	»Activity«
»High«	»High«	»High«	»High«	»High«	»Activity«
»High«	»High«	»High«	»High«	»High«	»Activity«
»Low«	»Low«	»Low«	»Low«	»Low«	»Activity«
»High«	»High«	»Low«	»Activity«	»High«	»Activity«
			»Activity«		»Activity«
»High«	»Low«	»Low«	»Low«	»High«	»Activity«
»High«				»High«	»Activity« 0.1 mS/ Div.

FOR SERVICE MANUALS
CONTACT:
MAURITRON TECHNICAL SERVICES
www.mauritron.co.uk
TEL: 01844 - 351694
FAX: 01844 - 352554

PLAY OSITION	SERVICE POSITION 1	SERVICE POSITION 2	SERVICE POSITION 3	SERVICE POSITION 4	SEARCH POSITION
A_1/A_2	A_2	A_2	A_1/A_2	A_1/A_2	A_1/A_2
B Stable)			B (Unstable)	B* (Stable)	»Activity«
»High«*				»High«	»Activity«
32 MHz*	2.82 MHz	2.82 MHz	4.32 MHz*	4.32 MHz*	4.32 MHz
D			D	D	D
D			D	D	D
Activity«				»Activity«	»Activity«
					»Activity«

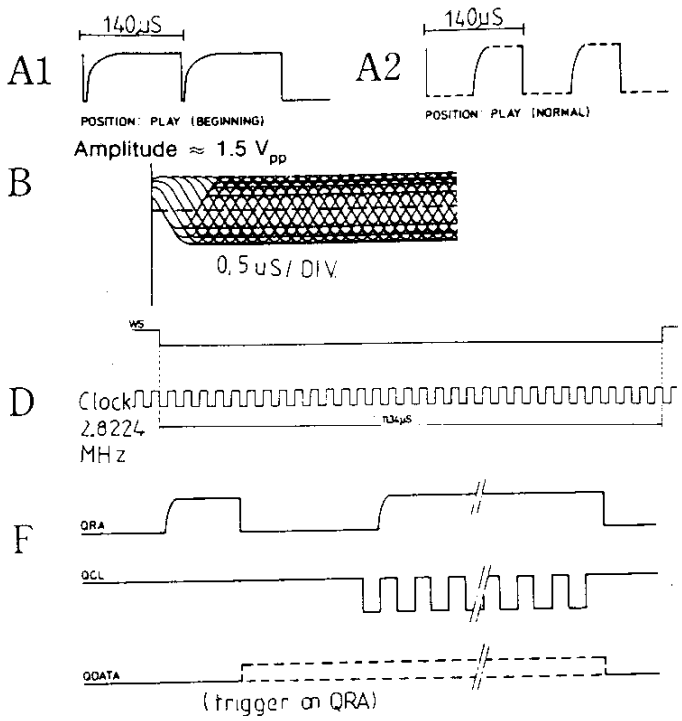

(English)

PIN	REMARKS	PLAY POSITION	P
30 31 29	QRA (Q-channel Request Acknowledge). QCL (Q Clock). QData QRA is initiated by 5IC4 with 'high', 5IC7 answers with 'low'. With the next leading clock pulse (Q CL), the QRA is set 'high' again by 5IC4. When 5IC6 has taken enough information (via Q Data), QRA will go 'low'. This makes the QRA times vary each time.	F F F	
33 35 34	SW (Subcode Word clock). SC (Subcode Clock). SD (Subcode DATA) After Motor Start Pulse, Subcode Word Clock is visible. While the burst of 10 clock pulses appear on SC, the Q-channel information is transferred on SD. Hereafter the P-bit indication follows. The P-bit is 'high' between two bursts of 10 clock pulses in case of pause indication, and 'low' in case of music indication. There will be P-bit indication between two bursts of 10 clock pulses. The P-bit indication is 'high' during pause and 'low' during music.	G	
28	$\overline{CRI}$ (Counter Reset Inhibit). $\overline{CRI}$ is 'low' in case of track jumping.	»High«	
32	$\overline{DEEM}$ (Deemphasis). 'Low' when playing test disc 5 track no. 14 'High' when playing test disc 5 track no. 15		
19	OSC. Input from crystal oscillator.	11.28 MHz	11
11	$\overline{MUTE}$. Mutes the audio signal	»High«	
22	PD/OC (Phase Detector/Oscillator Control). Pulses from the output of the phasedetector are integrated and controls the oscillatorfrequency.		
23	IREF. Current reference for the phasedetector.		
24	FB (Feed Back). Keeps the operating point for the data slicer.		

FOR SERVICE MANUALS
CONTACT:
MAURITRON TECHNICAL SERVICES
www.mauritron.co.uk
TEL: 01844 - 351694
FAX: 01844 - 352554

31IC6304 SAA 7220

PIN	REMARKS	PLAY POSITION	S PC
18 16	WS (Word Select) Clock	I	
15	Data	»Activity«	»
22	$\overline{ATSB}$ (Attenuation Audio Signal). At 'low', the signal is lowered by 12 dB		
23	$\overline{MUSB}$ (Soft Mute). $\overline{MUSB}$ is 'low' when jumping from one track to another. *Will be 'high' during search in service position 4.	»High«	
14	DOBM (Digital Output). Error corrected audio and subcode data.		

	PLAY POSITION	SERVICE POSITION 1	SERVICE POSITION 2	SERVICE POSITION 3	SERVICE POSITION 4	SEARCH POSITION
ledge). h', 5IC7 answers with 'low'. With the next leading clock pulse ı by 5IC4. rmation (via Q Data), Q RA will go 'low'. This makes the	F F F				F F F	
Word Clock is visible. . appear on SC, the Q-channel information is transferred on follows. rsts of 10 clock pulses in case of pause indication, and 'low' een two bursts of 10 clock pulses. The P-bit indication is g music.	G			G	G	
; 'low' in case of track jumping.	»High«				»High«	»Activity«
playing test disc 5 track no. 14 ck no. 15						
	11.28 MHz	11.28 MHz			11.28 MHz	
	»High«				»High«	»High«
· Control). sedetector are integrated and controls the oscillatorfrequency.						
asedetector.						
ing point for the data slicer.						

	PLAY POSITION	SERVICE POSITION 1	SERVICE POSITION 2	SERVICE POSITION 3	SERVICE POSITION 4	SEARCH POSITION
	I	I	I	I	I	I
	»Activity«	»Stable«	»Stable«	»Stable«	»Activity«	»Activity«
At 'low', the signal is lowered by 12 dB						
when jumping from one track to another. vice position 4.	»High«				»High«	*»Low«
rected audio and subcode data.						

7-19

PLAY POSITION	SERVICE POSITION 1	SERVICE POSITION 2	SERVICE POSITION 3	SERVICE POSITION 4	SEARCH POSITION
F F F				F F F	
G			G	G	
»High«				»High«	»Activity«
11.28 MHz	11.28 MHz			11.28 MHz	
»High«				»High«	»High«

F

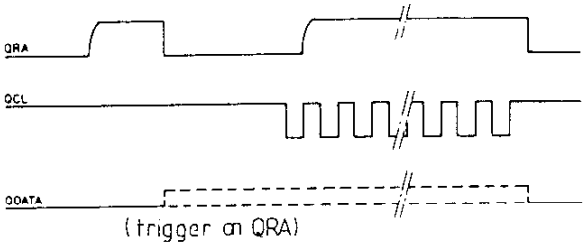

G

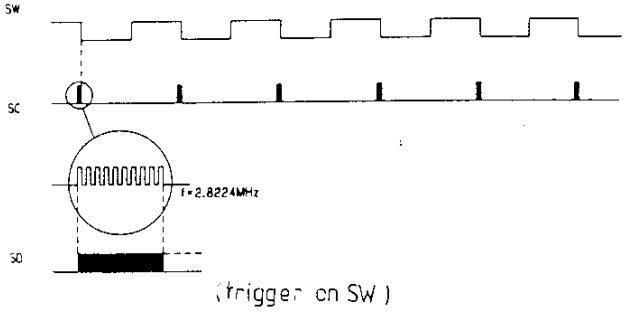

PLAY POSITION	SERVICE POSITION 1	SERVICE POSITION 2	SERVICE POSITION 3	SERVICE POSITION 4	SEARCH POSITION
I	I	I	I	I	I
»Activity«	»Stable«	»Stable«	»Stable«	»Activity«	»Activity«
»High«				»High«	*»Low«

I

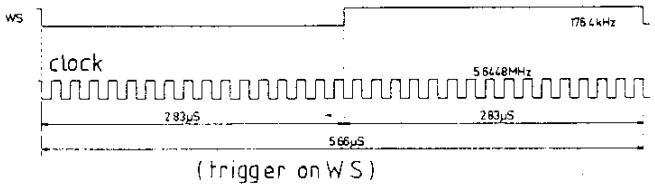

FOR SERVICE MANUALS
CONTACT:
MAURITRON TECHNICAL SERVICES
www.mauritron.co.uk
TEL: 01844 - 351694
FAX: 01844 - 352554

7-20

30IC6101 TDA 5708 (Focus Servo) *(English)*

PIN	REMARKS	PLAY POSITION
17	LO (Laser Out).	»High«
16	LM (Laser Monitor) Via the LM the power supply for the laser diode is controlled.	200 mV ±50 mV
5	FE (Focus Error). FE drives the focusing unit. When the $\overline{SI}$ goes 'high', the focusing unit will search for the focal point. When the player is brought into servicing position 2 without disc, the objective will search for the focal point. At pin 5 the FE signal varies between 0 V and +4 V.	
9 10 8 7	D1 D2 D3 D4 D1→D4 are the error signals from the photodetector circuits. When the disc is moved while the disc is in service position 2, the focusing unit should keep the laser beam in focus. When the disc is moving, there should be a changing signal on pins 7, 8, 9 and 10.	
3	HF (High Frequency). HF information from the 4 photodiodes.	
27	HF out (High Frequency out). HF out is the amplified information signal for the decoder. *After lead-in has been read.	
26 19 18	DET (Detector). HFD (High Frequency DETECTOR). $\overline{TL}$ (Track Loss). DET gives information on the level of the HF signal to the level/drop-out detector in 30IC6101. When the level of the HF signal is too low, HFD will go 'low'. $\overline{TL}$ will then go 'low' in order to tell 5IC4 that the tracking signals are unreliable.	
11 12	RE1 (Radial Error). RE1-2 are the control signals for the arm during tracking. RE2	
25	SC (Start Capacitor). *Rises to +5 V if focus point is found.	
6	FE lag (Focus Error). *When the disc is moved by hand, the signal will vary.	
13	AGC. *At maximum HF signal ≦-400 mV. At no HF signal +5 V.	*

30IC6102 TDA 5709 (Radial Servo)

PIN	REMARKS	PLAY POSITION
10	DAC (Digital to Analogue Converter). DAC controls the track jumping speed. The signal is derived from the signals B0-B3. *Knock carefully on the set, and there should be activity.	*
7	RE (Radial Error). RE keeps the light spot on the track. *A 650 Hz sine wave should be visible in the RE signal.	*
8	RE lag (Radial error for lag network). 30C2156 in the RE lag circuit has a memory function. It memorizes the degree of inclination on the disc. When a jump is made to a certain track on the disc, the memory should be cleared. This is done by 5IC4 via 30TR6109. *A 650 Hz sine wave should be visible in the RE lag signal.	*
4	D factor. (Offset control). Typically 0V.	Min.Gain -2.5V
5	K factor. (Gain control). Typically -1V/-1.5V.	Max.Gain -0.5V

s Servo) *(English)*

	PLAY POSITION	SERVICE POSITION 1	SERVICE POSITION 2	SERVICE POSITION 3	SERVICE POSITION 4	SEA POSI
	»High«	»Low«	»High«	»High«	»High«	»Hi
ı the LM the power supply for the laser diode is controlled.	200 mV ±50 mV		200 mV ±50 mV			
rives the focusing unit. ', the focusing unit will search for the focal point. ught into servicing position 2 without disc, the objective will search for varies between 0 V and +4 V.						
: error signals from the photodetector circuits. is moved while the disc is in service position 2, the focusing unit e laser beam in focus. is moving, there should be a changing signal on pins 7, 8, 9 and 10.						
IF information from the 4 photodiodes.						
y out). HF out is the amplified information signal for the decoder. read.		B (Stable)			B (Unstable)	I (St:
DETECTOR). on the level of the HF signal to the level/drop-out detector in 30IC6101. IF signal is too low, HFD will go 'low'. order to tell 5IC4 that the tracking signals are unreliable.						
1-2 are the control signals for the arm during tracking.					J	
ises to +5 V if focus point is found.		-5 V	*	+5 V	+5 V	
When the disc is moved by hand, the signal will vary.			*	Approx. 100 mVpp		
signal ≦-400 mV. At no HF signal +5 V.	*	»High«	»High«	*	*	

ıl Servo)

	PLAY POSITION	SERVICE POSITION 1	SERVICE POSITION 2	SERVICE POSITION 3	SERVICE POSITION 4	SEA POSI
;ue Converter). DAC controls the track jumping speed. om the signals B0-B3. set, and there should be activity.	*			»Low«	*	»Act
keeps the light spot on the track. ıould be visible in the RE signal.	*				*	
r lag network). 30C2156 in the RE lag circuit has a memory function. It of inclination on the disc. When a jump is made to a certain track on ıould be cleared. This is done by 5IC4 via 30TR6109. ould be visible in the RE lag signal.	*				*	
l). Typically 0V. . Typically -1V/-1.5V.	Min.Gain -2.5V Max.Gain -0.5V	+4		-0.5V	-1V/-1.5V	

PLAY POSITION	SERVICE POSITION 1	SERVICE POSITION 2	SERVICE POSITION 3	SERVICE POSITION 4	SEARCH POSITION
»High«	»Low«	»High«	»High«	»High«	»High«
200 mV ±50 mV		200 mV ±50 mV			
	B (Stable)			B (Unstable)	B* (Stable)
				J	
	-5 V	*	+5 V	+5 V	
		*	Approx. 100 mVpp		
*	»High«	»High«	*	*	

B

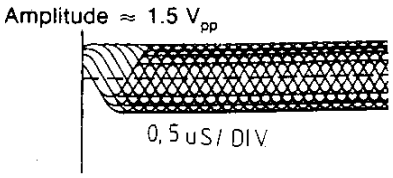

J

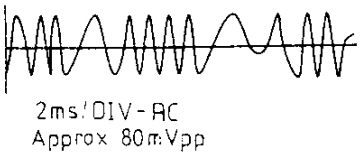

PLAY POSITION	SERVICE POSITION 1	SERVICE POSITION 2	SERVICE POSITION 3	SERVICE POSITION 4	SEARCH POSITION
*			»Low«	*	»Activity«
*				*	
*				*	
Min.Gain -2.5V Max.Gain -0.5V	+4		-0.5V	-1V/-1.5V	

FOR SERVICE MANUALS
CONTACT:
MAURITRON TECHNICAL SERVICES
www.mauritron.co.uk
TEL: 01844 - 351694
FAX: 01844 - 352554

Slutafprøvning 25xx

Denne afprøvning bør benyttes som slutkontrol efter endt reparation, og sikrer at hovedparten af Beocenterens funktioner er i orden.

Final Testing of 25xx

This testing procedure should be used as a final check after completion of repairs to ensure that the majority of the Beocenter's functions are in working order.

Tilslut Beocenter 8500/9500 til lysnet.

Connect Beocenter 8500/9500 to mains.

Punktum i display lyser.

Stand-by diode lights up.

Udfør lysdiodekontrol ifølge testprogram.
Se side 7-6 i servicemanual.

Perform LED check as per testing program.
See page 7-6 in servicing manual.

Tast [STAND BY] Key [STAND BY]	
Tast [RADIO] Key [RADIO]	Radio starter på den sidst benyttede station. Radio starts on the station last used.
Tast [SEARCH] Key [SEARCH]	MANUAL; FREQ; AM-FM og <<SEARCH>> skal lyse. MANUAL; FREQ; AM-FM and <<SEARCH>> must light up.
Tast [AM-FM] Key [AM-FM]	Til display viser 150. Until display shows 150.
Tast [>>] Key [>>]	Søger til AM-station, hvor lydkvaliteten kan bedømmes. Searches for AM station on which to evaluate sound quality.
Tast [AM-FM] Key [AM-FM]	Til display viser 87,5. Until display shows 87.5
Tast [>>] Key [>>]	Søger til FM-station, hvor lydkvaliteten kan bedømmes. Searches for FM station on which to evaluate sound quality.
Tast [LOAD TAPE] Ilæg kassettebånd for optagelse. Key [LOAD TAPE] Insert cassette for recording.	Tapeskuffe åbnes. Tape deck opens.
Tast [RECORD] Key [RECORD]	VU indikerer indspillestyrke. VU indicates recording volume.
Tast [RECORD] Optag 1 min. Key [RECORD] Record 1 min.	Optagelse starter. Recording starts.
Tast [RETURN] Key [RETURN]	Spoler tilbage til optagestart. Rewinds to start of recording.

FOR SERVICE MANUALS
CONTACT:
MAURITRON TECHNICAL SERVICES
www.mauritron.co.uk
TEL: 01844 - 351694
FAX: 01844 - 352554

8-1

Tast TAPE 1 Key TAPE 1	Optagelse afspilles, hvorved lydkvaliteten kan bedømmes. Recording is played back, enabling sound quality to be evaluated.
Tast LOAD CD Key LOAD CD	CD-skuffe åbnes CD deck opens.
Ilæg CD-plade Insert CD	
Tast CD Key CD	CD-skuffe lukker og afspilning 1 starter. CD deck closes and playback 1 starts.
Tast STOP Key STOP	Lyt efter støj. Listen out for noise.
Tast CD Key CD	Afspilning fortsætter. Playback continues.
Tast HØJESTE NUMMER i nummerindikering Key HIGHST NUMBER indication	Søger til sidste nummer og starter afspilning. Searches for last number and starts playback.
Tast LOAD CD Key LOAD CD	Fjern CD-plade og bånd fra Beocenteren. Remove CD and tape from Beocenter.
Tast STAND BY med fjernbetjening. Key STAND BY using remote control.	CD- og TAPE-skuffe lukkes. CD and TAPE decks close.

ISOLATIONSTEST

Ethvert apparat **skal** isolationstestes efter at det har været adskilt. Testen udføres når apparatet igen er helt samlet og klar til udlevering til kunden.

Isolationstest for Beocenter 8500/9500

Isolationstesten udføres på følgende måde:
De to stikben på netstikket kortsluttes og tilsluttes en af terminalerne på isolationstesteren. Den anden terminal fra isolationstesteren tilsluttes stelbenet i hovedtelefonstikdåsen.

OBS!
For at undgå beskadigelser på apparatet er det vigtigt, at begge terminaler fra isolationstesteren har virkelig god mekanisk kontakt.

Der drejes nu langsomt med spændingsreguleringen op isolationstesteren indtil en spænding på 1,5 - 2 kV er opnået. Her skal den holdes i 1 sekund, derefter drejes der langsomt ned for spændingen igen.

Der må ikke på noget tidspunkt under testen forekomme overslag.

INSULATION TEST

Each set **must** be insulation tested after dismantling. The test is to be performed when the set has been reassembled and is ready for delivery to the customer.

Insulation test for Beocenter 8500/9500

Make the insulation test as follows: Short-circuit the two plug pins of the mains plug and connect one of the terminals of the insulation tester. Connect the other terminal of the insulation tester to the chassis pin of the headphone socket.

N.B.!
To avoid ruining the set, it is essential that both insulator test terminals are in really good mechanical contact.

Now turn slowly the voltage control of the insulation tester until a voltage of 1.5 - 2 kV is obtained. Hold it there for 1 second, then turn slowly the voltage down again.

At no point during the testing procedure any flashovers are permissible.

FOR SERVICE MANUALS
CONTACT:
MAURITRON TECHNICAL SERVICES
www.mauritron.co.uk
TEL: 01844 - 351694
FAX: 01844 - 352554

Bang & Olufsen

Beocenter 8000

Type 2551, 2552

Beocenter 8500/9500

Corrections

FOR SERVICE MANUALS
CONTACT:
MAURITRON TECHNICAL SERVICES
www.mauritron.co.uk
TEL: 01844 - 351694
FAX: 01844 - 352554

SERVICE ANVISNING
SERVICE MANUAL
SERVICEANLEITUNG
MANUAL d'ENTRETIEN

3538811 06-92 Indklæbes i serviceanvisningen Beocenter 9500 (3538748)
Paste into Service Manual Beocenter 9500 (3538748)
In Serviceanleitung Beocenter 9500 (3538749) einkleben
A coller le Manual d'entretien pour Beocenter 9500 (3538749)

Bang & Olufsen

INDHOLD

Moduloversigt 15
Tekniske specifikationer 15
Transformer forbindelser 15
Diagrammer 16
Elektrisk stykliste 17
Mekanisk stykliste 18
Corrections f. Beocenter 8500 and 9500 19

CONTENTS

Survey of modules 15
Technical specifications 15
Wiring of transformer 15
Circuit diagrams 16
List of electrical parts 17
List of mechanical parts 18
Corrections f. Beocenter 8500 and 9500 19

FOR SERVICE MANUALS
CONTACT:
MAURITRON TECHNICAL SERVICES
www.mauritron.co.uk
TEL: 01844 - 351694
FAX: 01844 - 352554

10 AM/FM, RF, IF Decoder ..... diagr. A
page 2-2, 2-3

17 FM tuner ..... diagr. ?
page 1-9

20 Tape Recorder ..... diagr. D, E, F
page 10-1, 10-2, 10-3

21 Connnection Board ..... diagr. F
page 2-8

30 CD Servo (version II) ..... diagr. J
page 10-1 (in service Manual 3538800)

31 CD Decoder ..... diagr. K, L
page 2-14

40 System Control and IR ..... diagr. G
page 16-2

41 Key Board left ..... diagr. H
page 2-10

42 Key Board middle ..... diagr. H
page 2-10

43 Key Board right ..... diagr. H
page 2-10

44 Display left ..... diagr. I
page 2-11

45 Display right ..... diagr. I
page 2-11

46 7 Segment Display ..... diagr. I
page 2-11

51 Headphone ..... diagr. C
page 16-3

53 Input Select ..... diagr. B
page 16-1

54 Volume and Tone Control ..... diagr. B
page 16-1

60 Power Supply and Output Ampl. ..... diagr. C
page 16-3

61 Speaker Sockets ..... diagr. C
page16-3

62 Rectifieres ..... diagr. C
page 16-3

64 Fuses ..... diagr. C
page 16-3

65 Power Supply Voltage Regulators ..... diagr. C
page 16-3

66 CD On/Off Relay ..... diagr. C
page 16-3

93 Tape Mechanism (version II) ..... diagr. D, F
page 10-1, 10-3 (in Service Manual 3538773)

96 CD Mechanism (version II) ..... diagr. J
page 10-1 (in Service Manual 3538800)

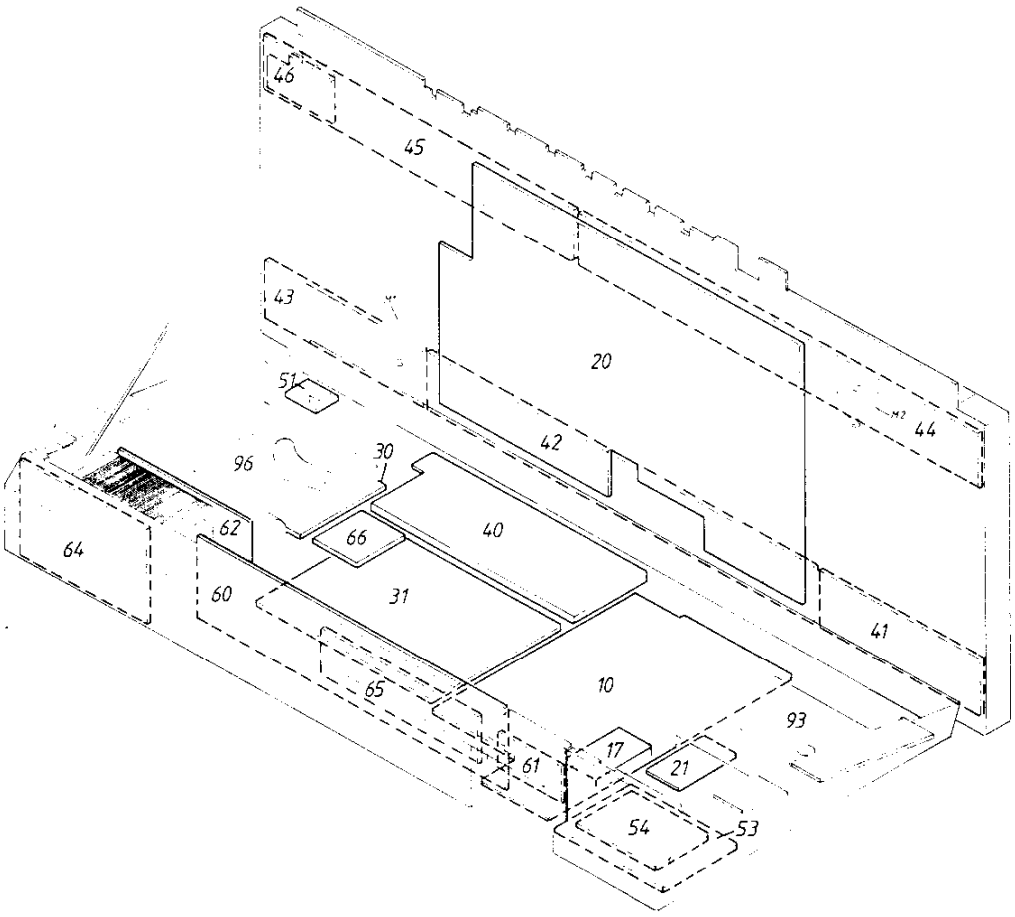

TECHNICAL SPECIFICATIONS

Beocenter 8000	Type 2551, 2552
As Beocenter 8500 except:	
Connections:	
Audio Link	Tape 2, Phono (RIAA built-in)
Audio Aux Link	Beovision, 7 -pin
Speaker	Beovox speakers, 2 sockets 2-pin
Microphone	Non

WIRING OF TRANSFORMER

Beocenter 8000, Type 2551, 2552
Beocenter 8500, Type 2511, 2514, 2515
Beocenter 9500, Type 2506, 2507, 2510

Transformer (8013509) kan tilkobles enten 230V~ eller 240V~ 50 Hz, netspænding. Netledningen påloddes de indrammede loddespyd:

Der Transformator (8013509) kann entweder an 220V oder 240V (50 Hz) Netzspannung angeschlossen werden.
Die Netzleitung ist an den gekennzeichneten Lötspitzen anzulöten.

Transformer (8013509) can be connected to either 230V~ or 240V~ (50 Hz). Mains voltage. Solder the mains lead to the solder pads shown on the illustration.

Il est possible de raccorder le transformateur (8013509) à une tension secteur de 220 ou 240 V, 50 Hz.
Souder le cordon d'alimentation aux pastilles encadrées.

FOR SERVICE MANUALS
CONTACT:
MAURITRON TECHNICAL SERVICES
www.mauritron.co.uk
TEL: 01844 - 351694
FAX: 01844 - 352554

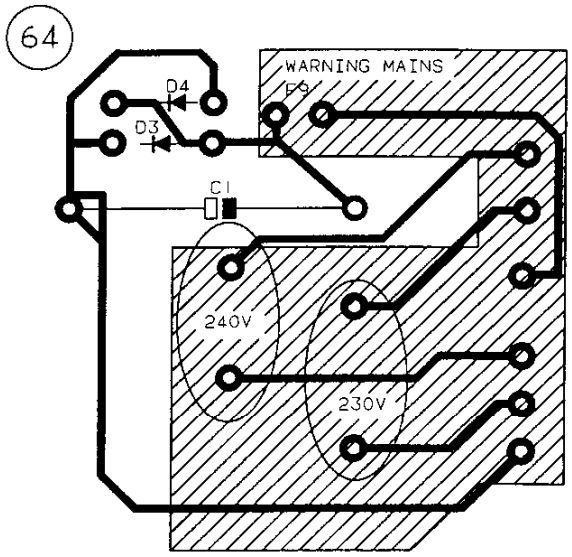

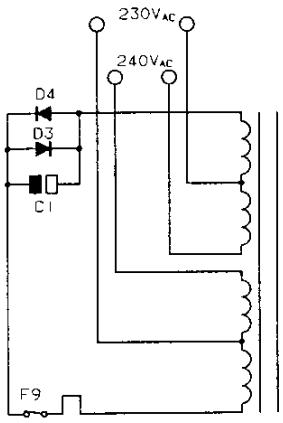

PCB 64 PRIMARY

COPPERFOIL ON REAR SIDE

DIAGRAM B (Mic. Ampl., Input Select, Tone and Volume Control)

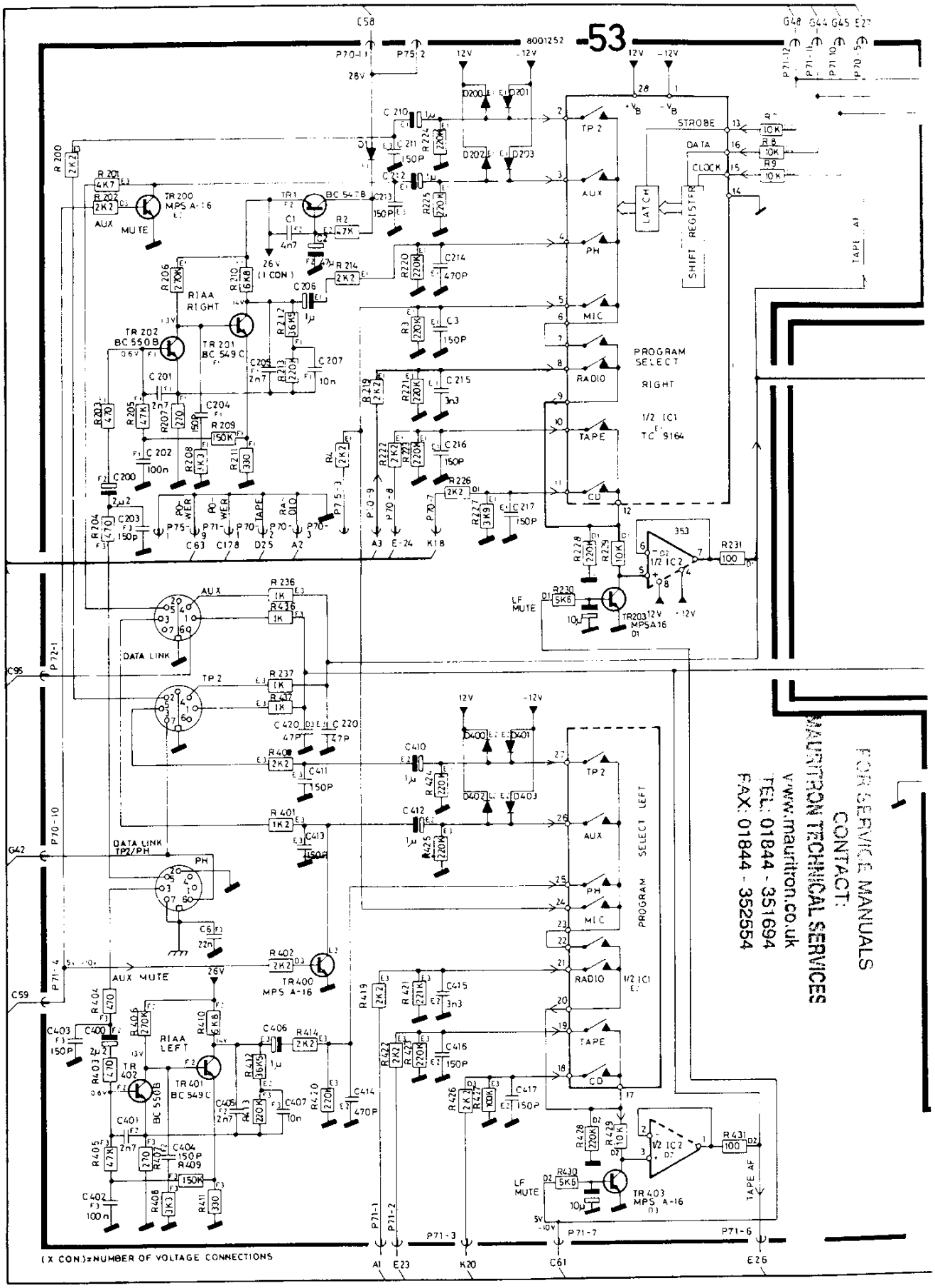

FOR SERVICE MANUALS
CONTACT:
MAURITRON TECHNICAL SERVICES
www.mauritron.co.uk
TEL: 01844 - 351694
FAX: 01844 - 352554

elect, Tone and Volume Control)

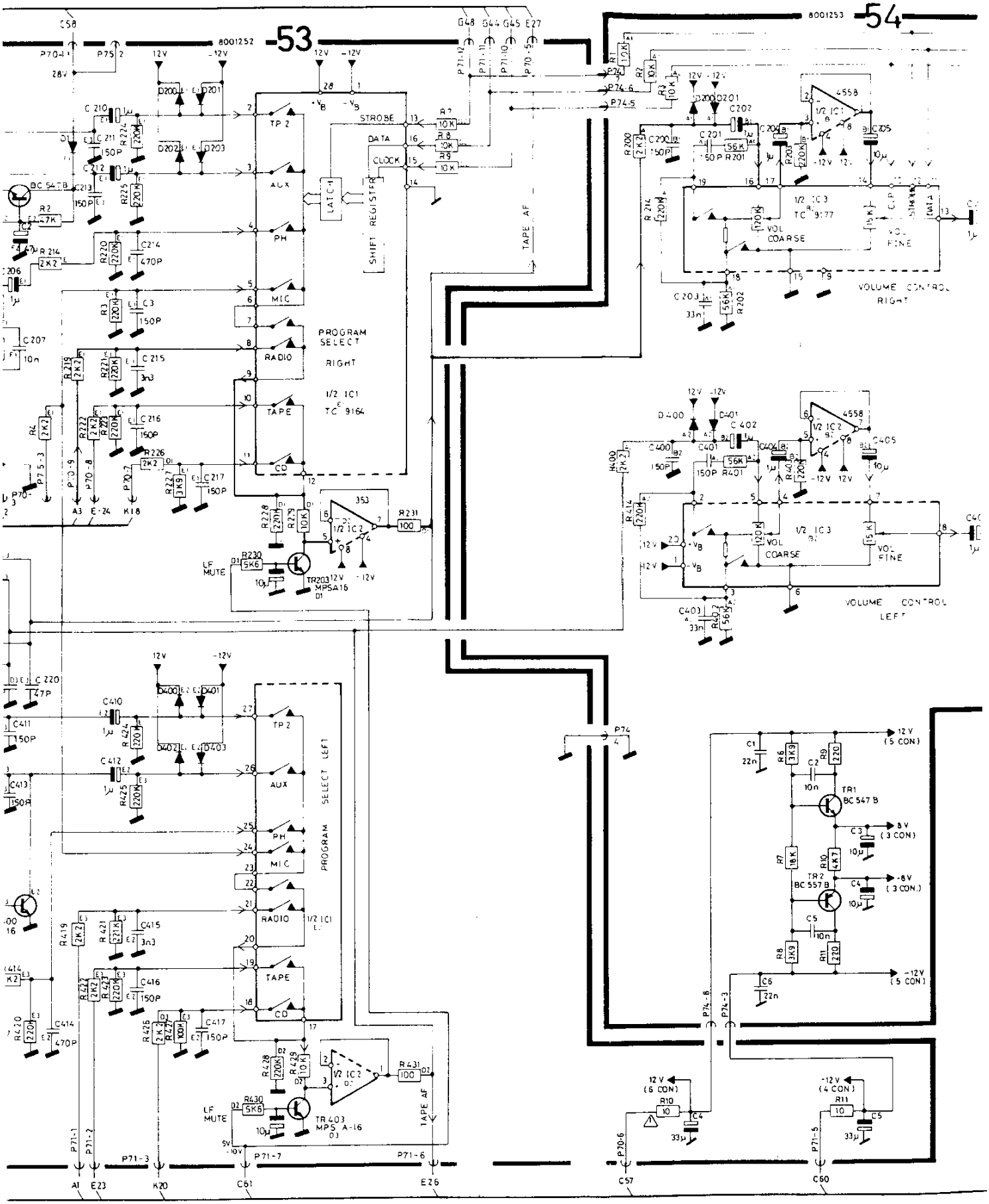

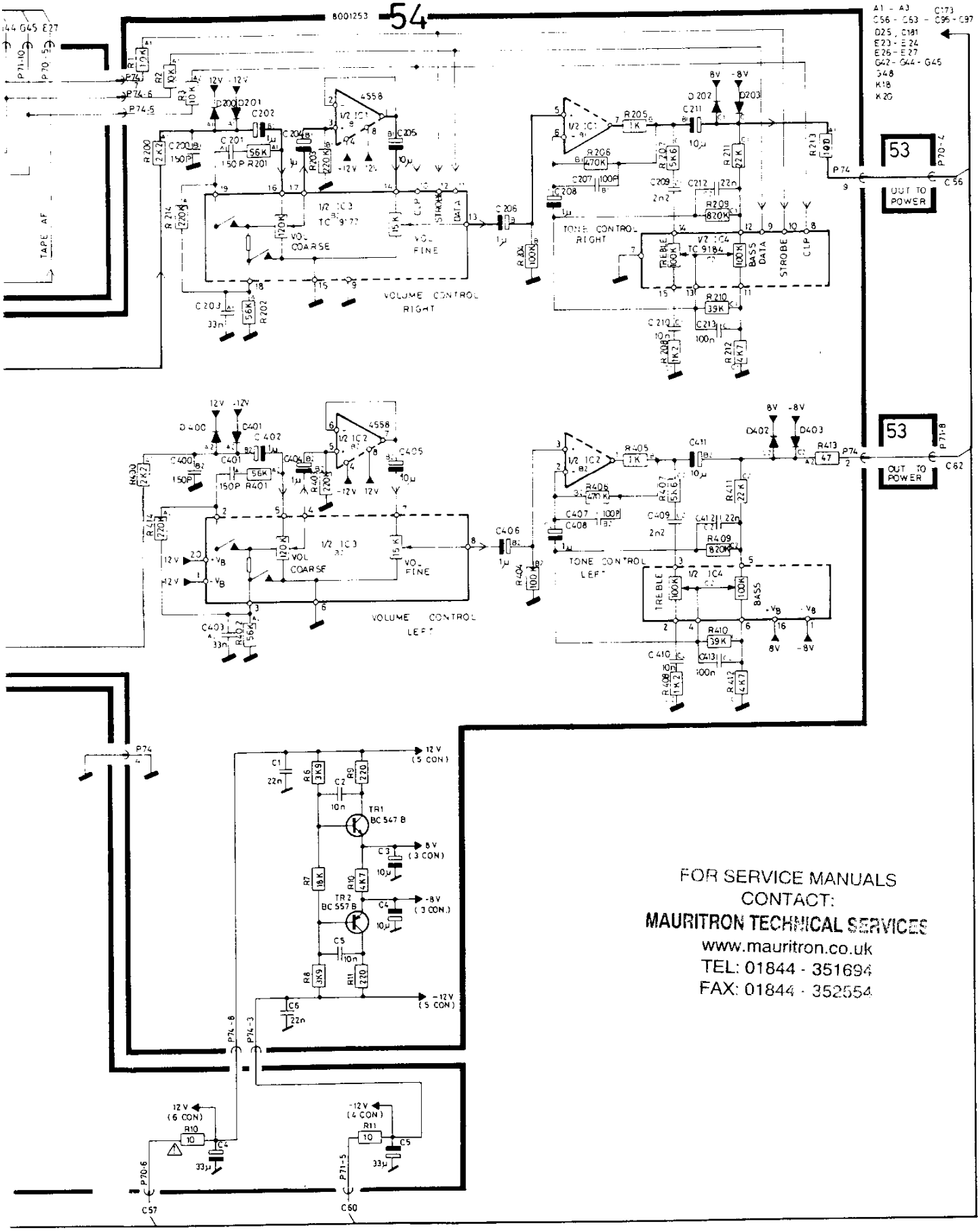
8001253
54
A1 - A3
C56 - C63 - C95 - C97
C173
D25 , C181
E23 - E24
E26 - E27
G42 - G44 - G45
S48
K18
K20
TAPE AF
VOLUME CONTROL RIGHT
TONE CONTROL RIGHT
VOLUME CONTROL LEFT
TONE CONTROL LEFT
VOL COARSE
VOL FINE
TREBLE
BASS
DATA
STROBE
CLP
OUT TO POWER
53
FOR SERVICE MANUALS
CONTACT:
MAURITRON TECHNICAL SERVICES
www.mauritron.co.uk
TEL: 01844 - 351694
FAX: 01844 - 352554

16-2

DIAGRAM G (System Control and IR Transceiver)

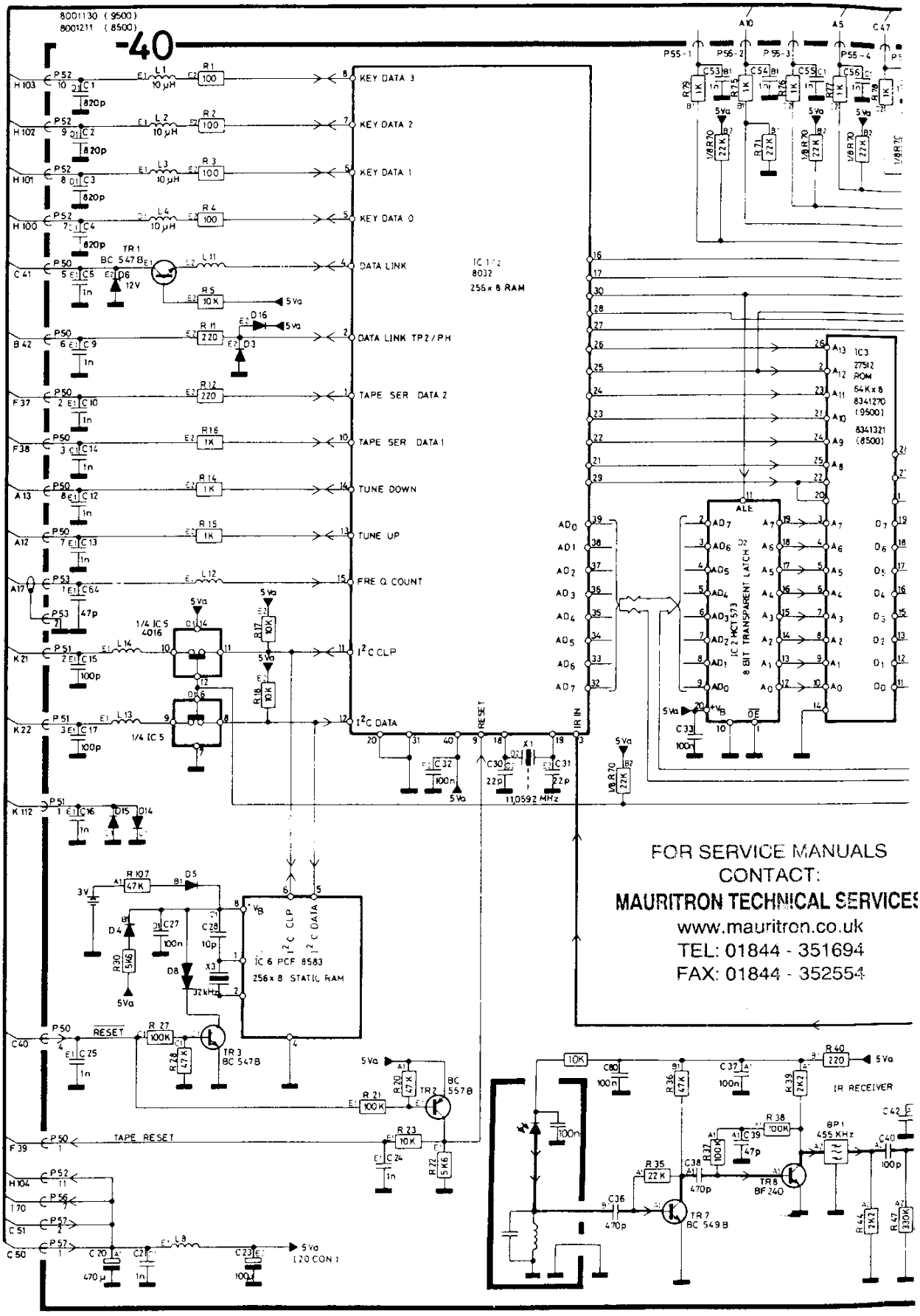

(X CON) = NUMBER OF VOLTAGE CONNECTIONS

Transceiver)

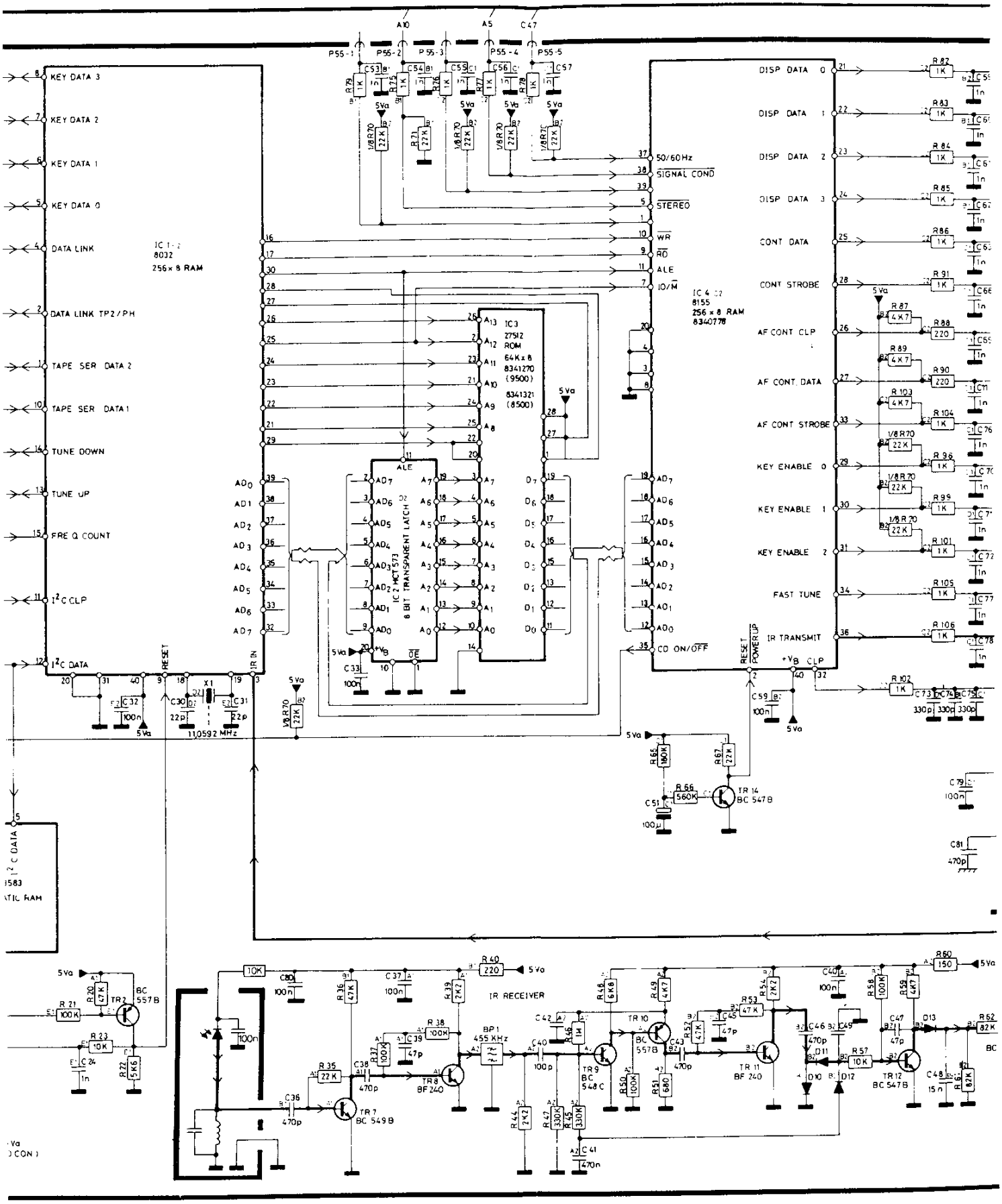

Bang & Olufsen

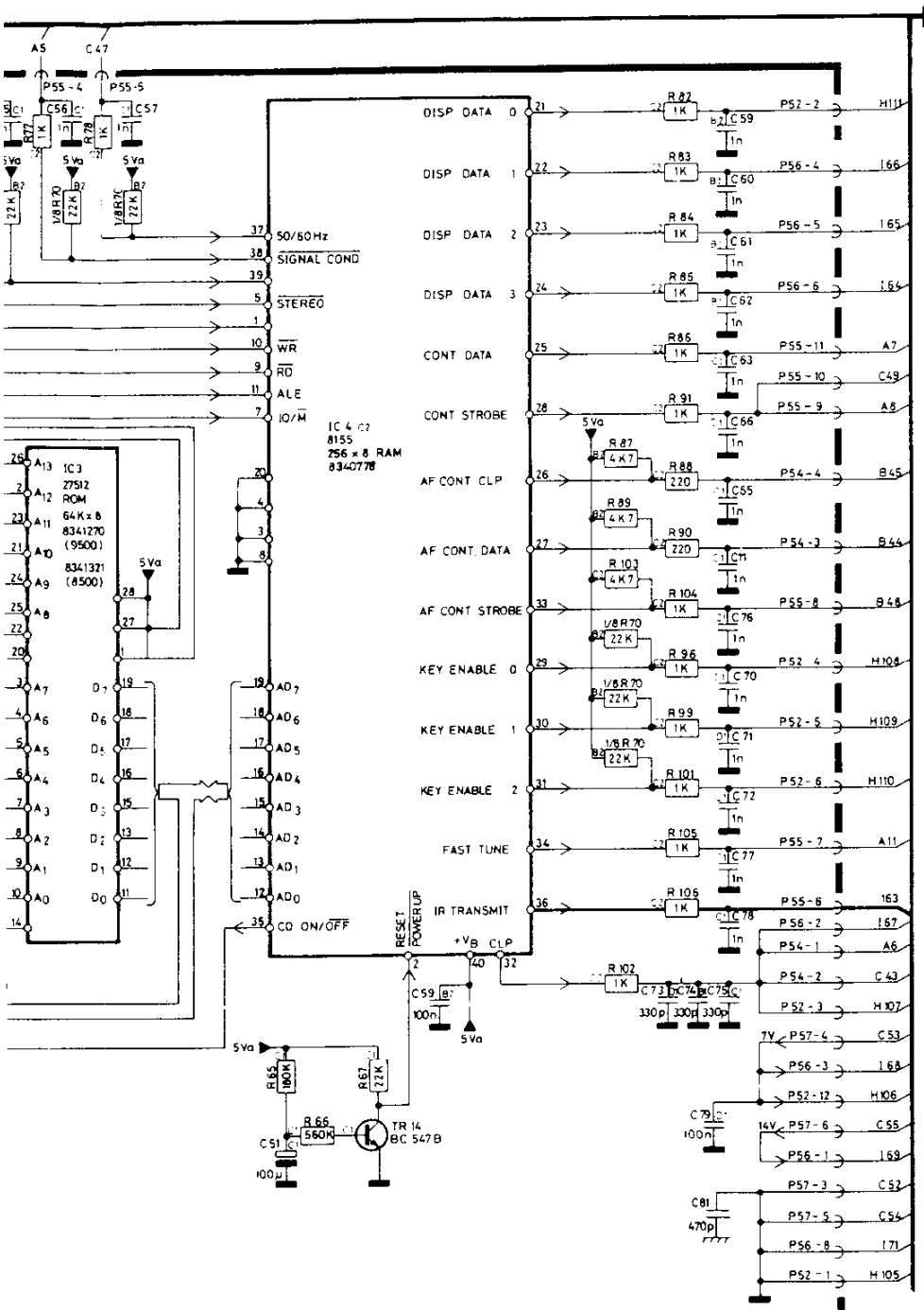

A5 – A8 , A10 –A13 , A17
B42, B44 – B46 , B 48
C40 – C41 , C 43 , C47, C49 , C179 , C180
C50 – C55
F 37 – F 39
I 64 – I 71

BLOCK DIAGRAM SYSTEM CONTROL

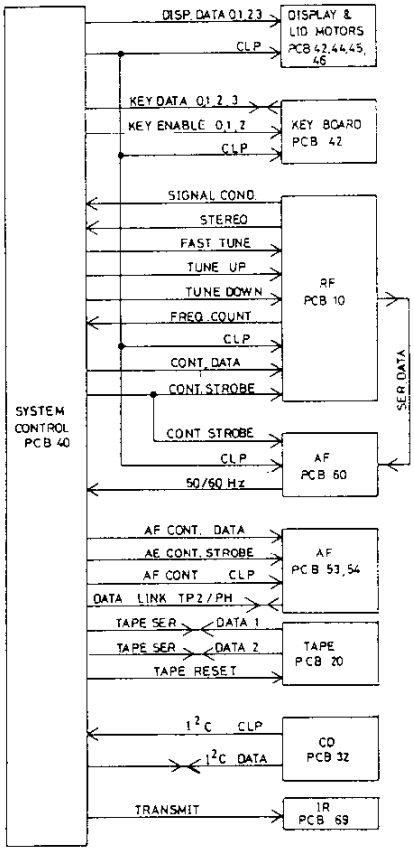

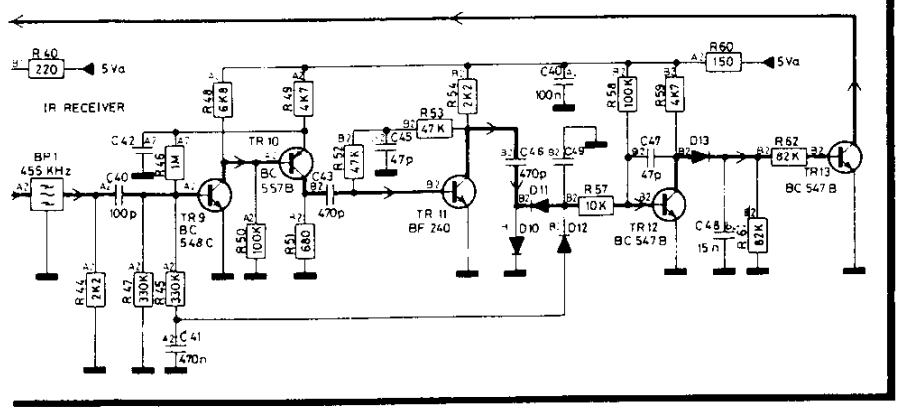

FOR SERVICE MANUALS
CONTACT:
MAURITRON TECHNICAL SERVICES
www.mauritron.co.uk
TEL: 01844 - 351694
FAX: 01844 - 352554

DIAGRAM C (Power Supply and Output Ampl. for 16 bit CD version)

NB As all fuses are placed in fuse holders, solding is unneccessary when replacing the fuses

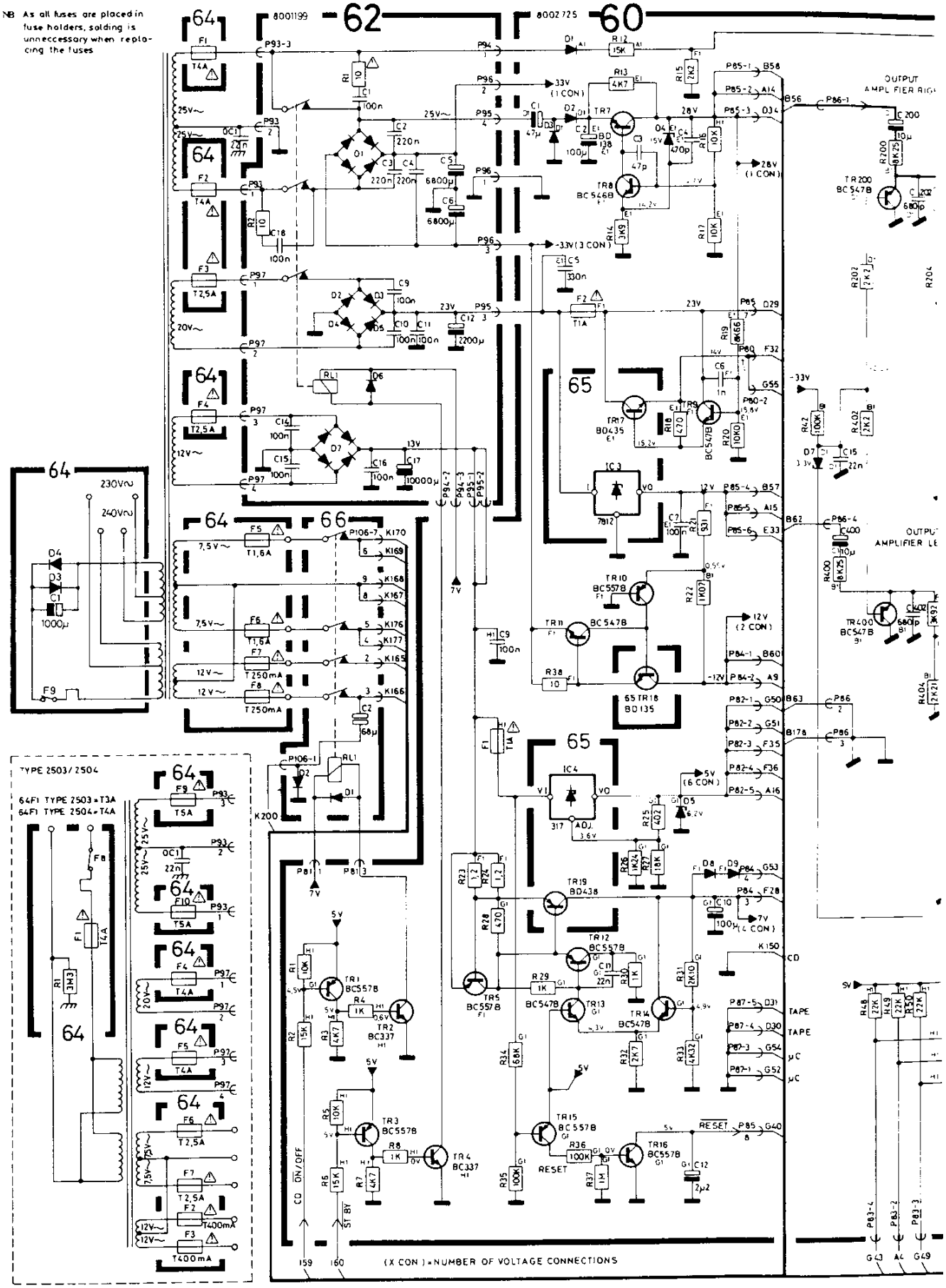

utput Ampl. for 16 bit CD version)

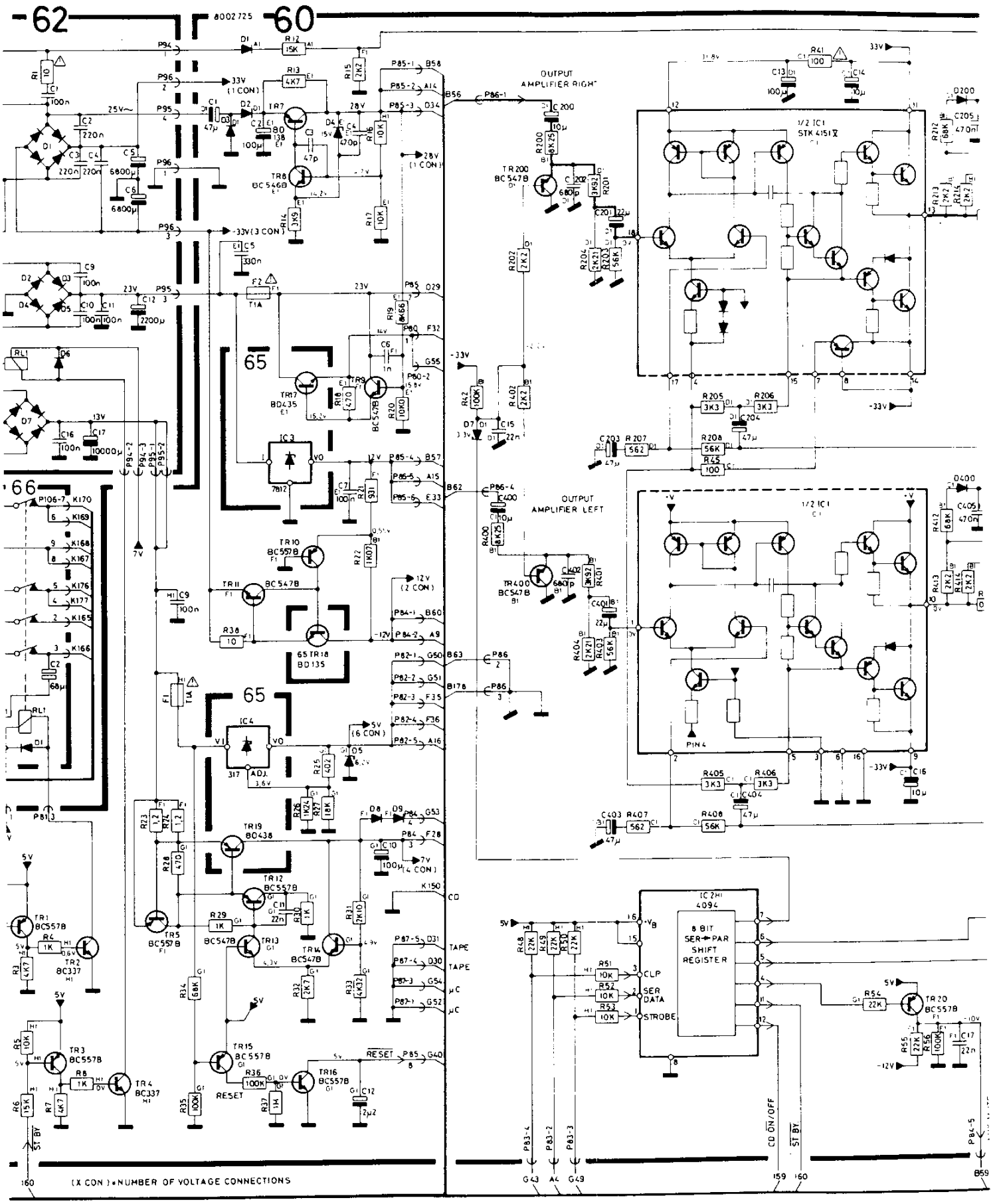

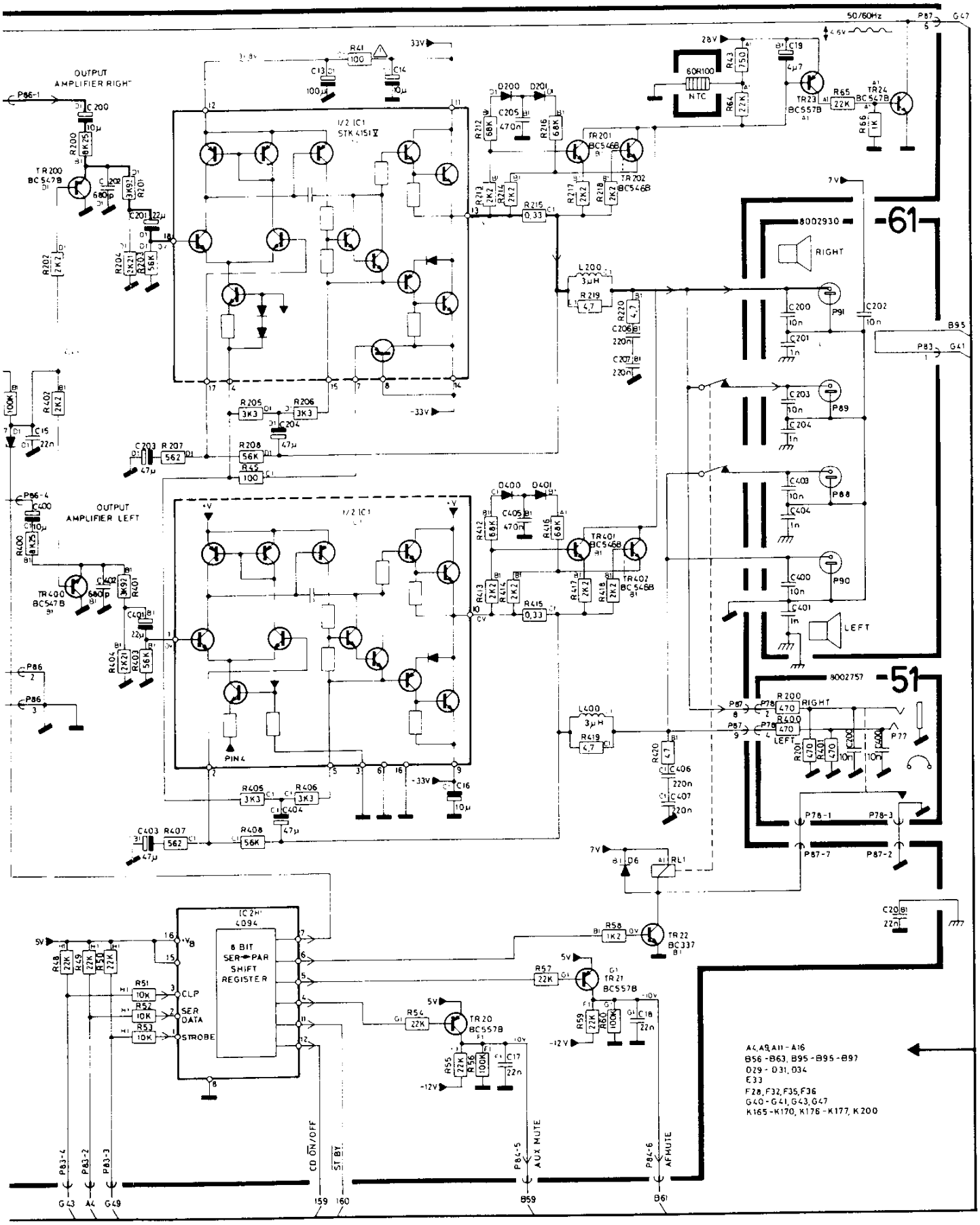
OUTPUT AMPLIFIER RIGHT
OUTPUT AMPLIFIER LEFT
1/2 IC1 STK 4151 V
1/2 IC1
PIN 4
IC 2H 4094
8 BIT SER→PAR SHIFT REGISTER
CLP
SER DATA
STROBE
CD ON/OFF
ST BY
AUX MUTE
AFMUTE
RIGHT
LEFT
8002930
8002757
-61
-51
50/60Hz
NTC
A4,A9,A11 - A16
B56 - B63, B95 - B97
D29 - D31, D34
E33
F28, F32, F35, F36
G40 - G41, G43, G47
K165 - K170, K176 - K177, K200

C

LIST OF ELECTRICAL PARTS

PCB20, 8004919
Tape Recorder

PCB30, 8005288
Servo

PCB53, 8001553
Input Select

PCB60, 8001532
Power Supply and Output Ampl.

All electrical parts are identical with BC 8500, chapter 3 (f. PCB20 see Tape Deck Version II, chapter 11 (Service Manual 3538773) and f. PCB30, see CD-Mechanism Version II, chapter 11 (Service Manual 3538800)).

FOR SERVICE MANUALS
CONTACT:
MAURITRON TECHNICAL SERVICES
www.mauritron.co.uk
TEL: 01844 - 351694
FAX: 01844 - 352554

LIST OF MECHANICAL PARTS

Exp. view, see page 4-1
and page 4-2

Bottom

20modul	8004919	Tape Recorder (version II)
30modul	8005288	Servo, version II
53modul	8001553	Input Select
60modul	8001532	Power and Output Ampl.
93	8422069	Tape Mechanism version II
96	8420165	CD Mechanism with servo, vers. II
	8420166	CD Mechanism without servo, version II
5301	2542760	Bracket
9004	3451288	Front plate, left
9022	3164909	Cover
64T1	8013509	Transformer

Top

9101	3164925	Cover
9102	3162366	Lid, set
9103	3164864	Cover
9106	3013055	Guide rail, right
9107	8052461	Chassis
9116	3162366	Lid, set
9142	3162366	Lid, set

Parts not shown

3501303	Users Guide, Beosystem 8000 DK
3501304	Users Guide, Beosystem 8000 S
3501305	Users Guide, Beosystem 8000 SF
3501306	Users Guide, Beosystem 8000 GB
3501307	Users Guide, Beosystem 8000 D
3501308	Users Guide, Beosystem 8000 NL
3501309	Users Guide, Beosystem 8000 F
3502854	Setting up Guide, Beocenter 8000 DK
3502855	Setting up Guide, Beocenter 8000 S
3502856	Setting up Guide, Beocenter 8000 SF
3502857	Setting up Guide, Beocenter 8000 GB
3502858	Setting up Guide, Beocenter 8000 D
3502859	Setting up Guide, Beocenter 8000 NL
3502860	Setting up Guide, Beocenter 8000 F

FOR SERVICE MANUALS
CONTACT:
MAURITRON TECHNICAL SERVICES
www.mauritron.co.uk
TEL: 01844 - 351694
FAX: 01844 - 352554

All other Mechanical Parts are identical with BC 8500, chapter 4 and Tape Deck Version II, chapter 12 (Service Manual 3538773).

Bang&Olufsen

Corrections for Beocenter 8500 and Beocenter 9500

Wiring of transformer, see page 15-2

List of Mechanical Parts page 4-1 Bottom	64T1	8013509	Transformer, EU
		8013519	Transformer, EU (from old transformer with mains-voltage switch to new transformer without mains-voltage switch)
	9022	3164909	Cover f. transformer without mains-voltage switch
Top	9102	3162309	Lid, set, type 9500
	9106	3013055	Guide rail, right
	9116	3162309	Lid, set, type 9500
	9125	3030114	Bracket
	9130	3030114	Bracket
	9142	3162309	Lid, set, type 9500
Survey of screws, etc.	44	2732091	Rubber bushing

FOR SERVICE MANUALS
CONTACT:
MAURITRON TECHNICAL SERVICES
www.mauritron.co.uk
TEL: 01844 - 351694
FAX: 01844 - 352554