BEOGRAM 4002

BANG & OLUFSEN

Beogram 4002 - a high-fidelity stereo record player featuring fully automatic operation and high specifications. It is a development of Bang & Olufsen's first electronically controlled record player with tangential arm which tracks the disc in a straight line. The new MMC 4000 pickup uses an elliptic naked diamond, stylus force 1 gramme. Also the rotation of the disc is electronically controlled and consequently is independent of mains-voltage variations.

We wish to congratulate you on your Beogram 4002. We hope that these instructions will help you to realize the full benefit of your stereo system so that you will have no problems in attaining your objective - listening to music.

Yours faithfully,

Bang & Olufsen

CONTENTS

2 Setting up

3 Key Plan

4 Operation

5 Care of Discs

5 Pickup

6 Maintenance

6 Technical data

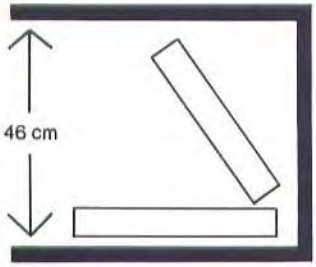

SETTING UP

The job of setting up your Beogram 4002 after transport and unpacking is covered by a separate manual.

The unit should be placed horizontally on a table or shelf system. In order to allow the dust cover to be opened completely, sufficient free height should be provided above the unit corresponding to 46 cm between two shelves as shown in this sketch.

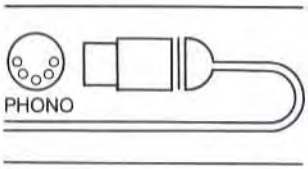

Connection to Amplifier

The cable fitted with a DIN plug should be run to the PHONO input (low impedance) of a high-fidelity stereo amplifier or stereo radio.

50/60Hz

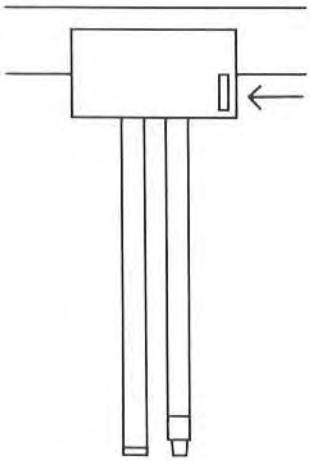

Mains

As received by you, your Beogram 4002 is set to 220 volts, and if this is your local mains voltage, all you have to do is to plug the mains lead into a wall socket. If not, the unit must be switched to the proper voltage; it has provision for switching between mains voltages of 110, 130, 220, and 240 volts AC. The change-over switch is located in the bottom of the unit and is easily turned, using a coin.

Your Beogram 4002 will operate on mains frequencies of both 50 and 60 Hz without switching of any kind.

Stylus Force Adjustment

Recommended stylus force for the MMC 4000 is 1 gramme.

The adjusting device (13) allows adjustment of stylus force between 0 and 1.5 grammes. Use the screwdriver which is provided, reading the value on the small scale.

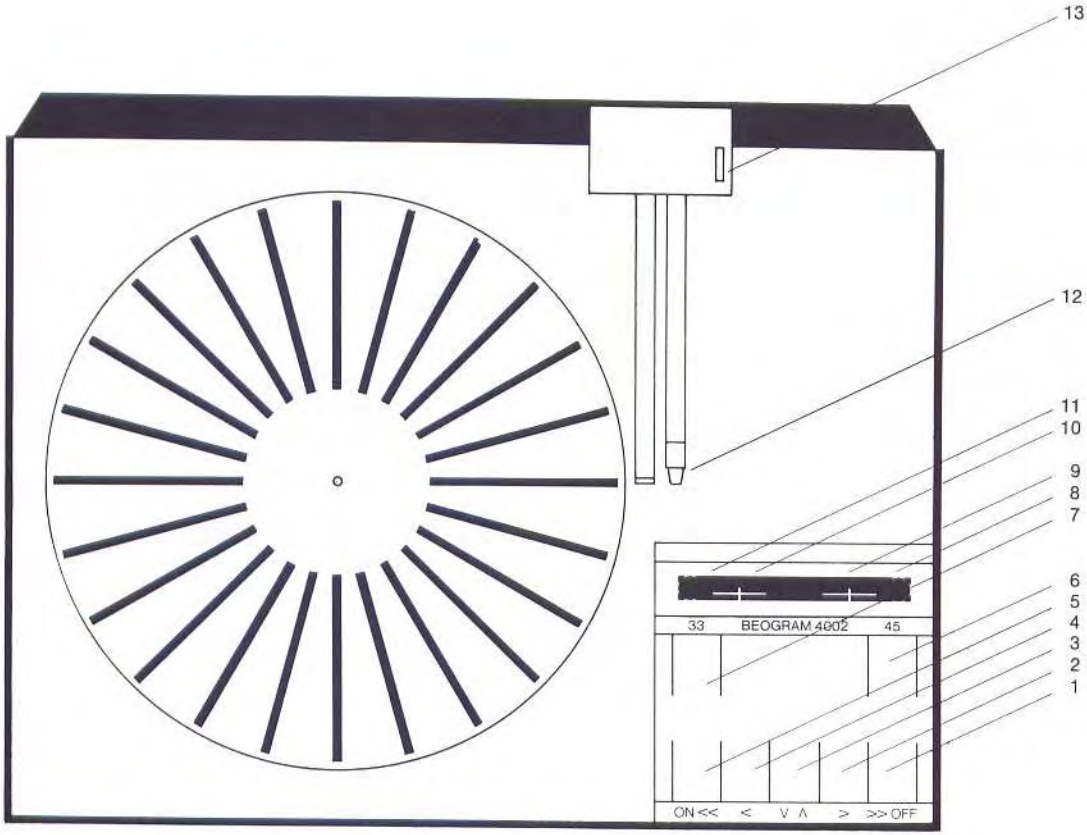
13
12
11
10
9
8
7
6
5
4
3
2
1
33
BEOGRAM 4002
45
ON << < V Λ > >> OFF

1 Stop and rapid outward travel

2 Slow outward travel

3 LIFT

4 SLOW inward travel

5 Start and rapid inward travel

6 Selection of 45 r.p.m.

7 Selection of 33 r.p.m.

8 Adjustment of 45 r.p.m.

9 45 r.p.m. indicator

10 33 r.p.m. indicator

11 Adjustment of 33 r.p.m.

12 MMC 4000 pickup

13 Stylus force adjustment

ON

OPERATION

Your Beogram 4002 is very simple to operate. All you have to do is to

put a disc on the turntable
and
press the ON button.

The automatic control system will then make the turntable rotate at the correct speed and bring the pickup in to the first groove of the disc and lower it.

When the disc has finished, the pickup lifts and travels out to the side, and the turntable stops.

Manual Operation

Your Beogram 4002 also has provision for more individual operation. You can stop playing, introducing a pause, begin playing in any desired place on the disc, or repeat a section.

OFF

Stop

If you wish to stop playing before the disc has finished, press OFF. The pickup will then rise and travel sideways out, and the turntable will stop.

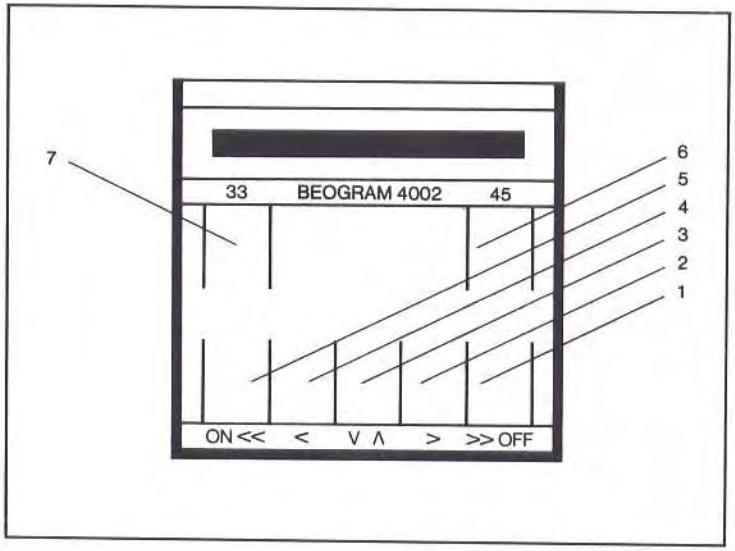

V Λ

Pause

You can introduce a pause anywhere you want while playing a disc. A light pressure applied to LIFT - with this symbol - will lift the pickup, and the pickup will be relowered when you press a second time.

ON <<

Arbitrary Lowering

If you do not wish to listen to a disc from the beginning, press ON again. The pickup will now travel in across the disc until you lower the stylus into the groove by pressing LIFT.

This movement across the disc is relatively quick. If you prefer slower scanning, press (4) instead. Movement will occur only as long as you press the button. To lower, press LIFT (3).

Repeat

When you wish to repeat a section you have already heard, you can do it in two ways:

Rapid scanning: By pressing OFF you can cause the pickup to travel out until you lower the stylus by pressing LIFT.

Slow scanning: Keep (2) depressed until the stylus is above the desired place and thereafter press LIFT.

Discs with Large Centre Holes

To play a disc with a large centre hole, the record spindle should be fitted with the adaptor which is supplied, before putting the disc on.

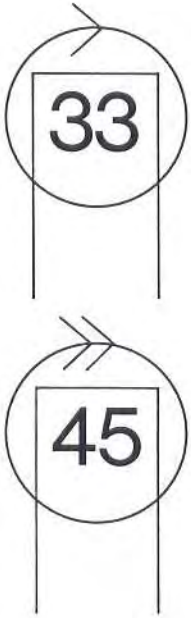

Speed

Your Beogram 4002 automatically selects the proper speed, indicated by illumination of one of the scales, 33 or 45.

In the case of the special 17 cm discs to be played at 33 r.p.m. you can select the speed yourself:

First press ON, and keep 33 depressed until the stylus has been lowered into the groove.

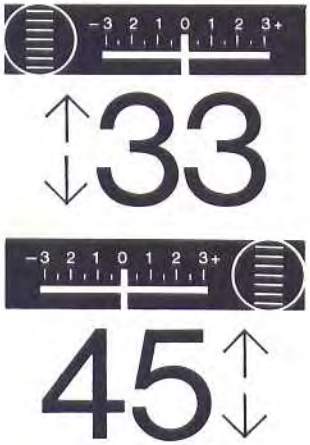

Fine Adjustment of Register

Your Beogram 4002 has two pointers and adjustment knobs for reading and (if required) adjusting the register. The 33 and 45 r.p.m. speeds can be adjusted individually, and correct adjustment is where the pointers are at 0. Towards + or – the speed is higher or lower, respectively, than the standard speed.

Care of discs

In designing the Beogram 4002, every effort has been made to ensure that your records can be played a large number of times with no deterioration of sound quality.

However, there is something you can do yourself; for example, you can minimize wear by avoiding dust particles and finger prints on your records.

Dust can be wiped off using one of the aids which are commercially available, but it is better to try to avoid the necessity for removing it.

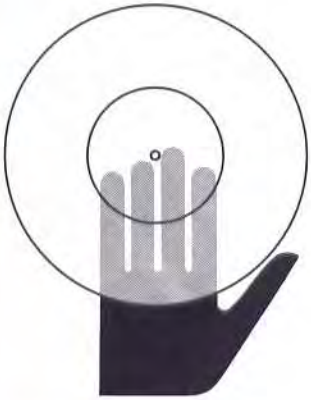

We assume that you keep your discs in their jackets or albums. It is not immaterial how you take out a disc because the friction against the inner side of the jacket is enough to give the disc a static charge so it will attract dust.

Hold the disc jacket so that its sides bend away from the disc. Put your hand in below the disc so that the middle finger touches the centre hole and the thumb grips the rim of the disc, and without touching the grooves of the disc. Pull the disc out of its jacket in such a manner that the jacket only touches the rim of the disc, not the actual surfaces.

Only hold the rim of the disc when putting it on the turntable.

Keep the dust cover of your Beogram 4002 closed while playing the disc.

Put the disc back in its jacket in the same careful manner, avoiding friction between the sides of the disc and the jacket. By doing so you help to reduce the need for anti-static wiping of your discs. Should this become necessary, proceed as follows:

Put the disc on the turntable; press ON; wait until the pickup has been lowered; then press LIFT. The pickup will now lift while the turntable continues to rotate, and you can wipe the disc.

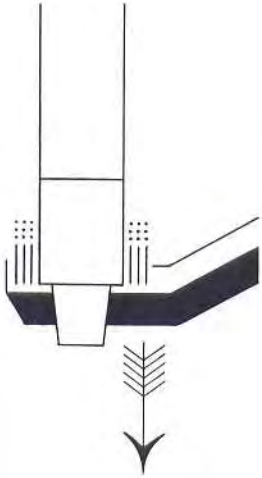

Cleaning the Pickup Stylus

Dust is practically certain to collect around the diamond stylus proper.

The cleaning brush supplied with your Beogram 4002 is specially designed for cleaning the stylus, and the sketch shows how to use it. Hold the brush up against the metal housing of the pickup cartridge, behind the stylus proper, and thereafter move it forwards in the direction of the transparent section of the pickup.

MMC 4000

CAUTION: Brushing in the opposite direction will ruin the stylus assembly, thereby rendering the pickup cartridge unserviceable.

Do not use detergents - use only this brush.

The protective hood should only be put on the pickup during transport of the Beogram 4002, not every time you have finished using it.

Replacing the Pickup Cartridge

Should it become necessary to replace the pickup cartridge because of damage to the stylus assembly or some other defect, the entire pickup cartridge should be taken off the arm and a new one inserted.

Hold the pickup firmly with one hand while carefully moving the cartridge from side to side, pulling outwards with the other.

A new complete cartridge carries this designation:

MMC 4000 type 8954410

Each MMC cartridge is supplied packed complete with calibration card showing the technical data of that particular unit.

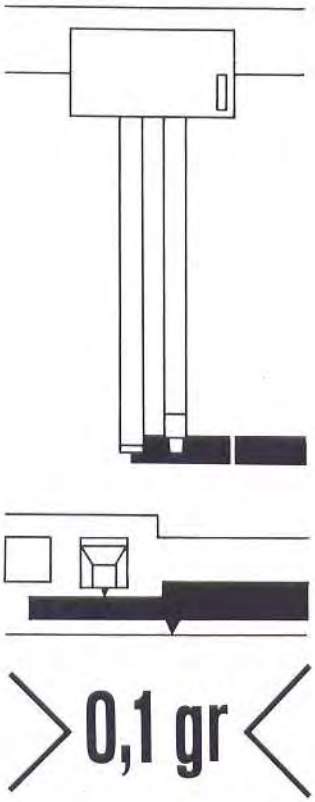

Each MMC 4000 unit is individually matched. This is your guarantee that it meets the technical data specified for it.

Checking the Stylus Force

Stylus force is adjusted as described on page 2. A check on the stylus force can be performed with the stylus-force balance which is provided. Place the balance on the chassis deck, to the right of the turntable, and control the pickup so that it is lowered on to the scale of the balance. To do this, first press ON and quickly thereafter (4). By alternately pressing (3), (2) (3) and (4) (3), cause the stylus to go down on that point of the balance where equilibrium exists. Read the number on the balance, and you can see whether it agrees with the reading on (13). If the disagreement is too great, we suggest that you have your dealer adjust the pickup-arm counterbalance weight.

Measuring accuracy of the stylus-force balance is 0.1 gramme.

Conversion to 4 Channels

Your Beogram 4002 can be converted so that it will also play CD-4 quadrophony discs.

The pickup cartridge must be replaced with an MMC 6000, which covers a frequency range up to 45,000 Hz.

Also required is a CD-4 decoder, to be installed in the record player. A separate, external decoder of another make may be connected instead. Lastly, the record player and decoder must be connected to a 4-channel amplifier system.

MAINTENANCE

The external surfaces of your Beogram 4002 can normally be kept clean with a dry cloth. Any grease marks on the metal surfaces can be removed with a soft cloth moistened in a cold or lukewarm solution of detergent in water, followed by thorough wiping with a dry cloth.

Take care not to damage the stylus! Put the protective hood on before wiping the metal surfaces of your Beogram 4002.

Dust Cover

Repeated wiping with a dry cloth will cause the dust cover to eventually pickup a static charge.

We therefore suggest that you occasionally use detergent whe wiping the dust cover.

Do not use alcohol as it may attack the material

Teak and Rosewood

If the wood surfaces seem grey and dry you may apply a thin film of teak or rosewood oil, though not more than once or twice a year. Use a thin grade oil, especially for rosewood.

Blond Oak

Do not use oil under any circumstances - even non-oil detergent or wax can cause discoloration of the untreated surface.

The removal of dark spots should be left to an expert.

TECHNICAL DATA		Subject to change without notice
	DIN 45 500 Requirements	BEOGRAM 4002
Type No.		**5501**
Sound system		Stereo, matrix
Output		2 x 1 mV
Speeds		33 - 45 rpm.
Tonearm		Tangential
Pickup cartridge		MMC 4000
Automatic record-size		Yes
Automatic pickup movement		Yes
Automatic speed selection		Yes
Wow and flutter, DIN	$<\pm$ 0.2%	$<\pm$ 0.05%
Wow and flutter, WRMS		$<\pm$ 0.025%
Rumble DIN unweighted	$>$ 35 dB	$>$ 42 dB
Rumble DIN weighted	$>$ 55 dB	$>$ 65 dB
Speed deviation	$<+$ 1.5% $-$ 1%	$<$ 0.02%
Speed control range		$>$ 6%
Dial for speed		2 pointers
Stylus pressure range		0 - 1.5 gram
Tangential tracking		0.04°
Lift system		Electronic
Antiskating		Parallel tracking, error angle compensated
Motor		Controlled synchronous
Drive system		Belt
Turntable		30 cm 2.2 kg
Dust cover		Hinged and detachable
Power supply		110 - 130 - 220 - 240 volts
Frequency		50 - 60 Hz
Power consumption		40 watts
Dimensions W x H x D		49 x 10 x 38 cm
Weight		12 kg
Pickup		MMC 4000
Stylus		Elliptical naked diamond
Radius of curvature	Spherical 15 µm $\pm$ 5 µm	5 x 17 µm
Frequency range	40 - 12,500 Hz $\pm$ 5 dB	20 - 30,000 Hz $\pm$ 2.5 dB
	63.5 - 8,000 Hz $\pm$ 2 dB	50 - 20,000 Hz $\pm$ 1,5 dB
Channel separation 1000 Hz	$\geqq$ 20 dB	$>$ 25 dB
400 - 10,000 Hz	$\geqq$ 15 dB	$>$ 20 dB
Channel difference	$\leqq$ 2 dB	$<$ 1.5 dB
Intermodulation	$<$ 1%	$<$ 1%
Recommended stylus pressure	$<$ 5 gram	1 gram
Compliance	$>4 \times 10^{-6}$ cm/dyn.	30×10^{-6} cm/dyn.
Effective tip mass		0.5 mg
Output mV/cm/sec.		0.6 mV/47 kohms

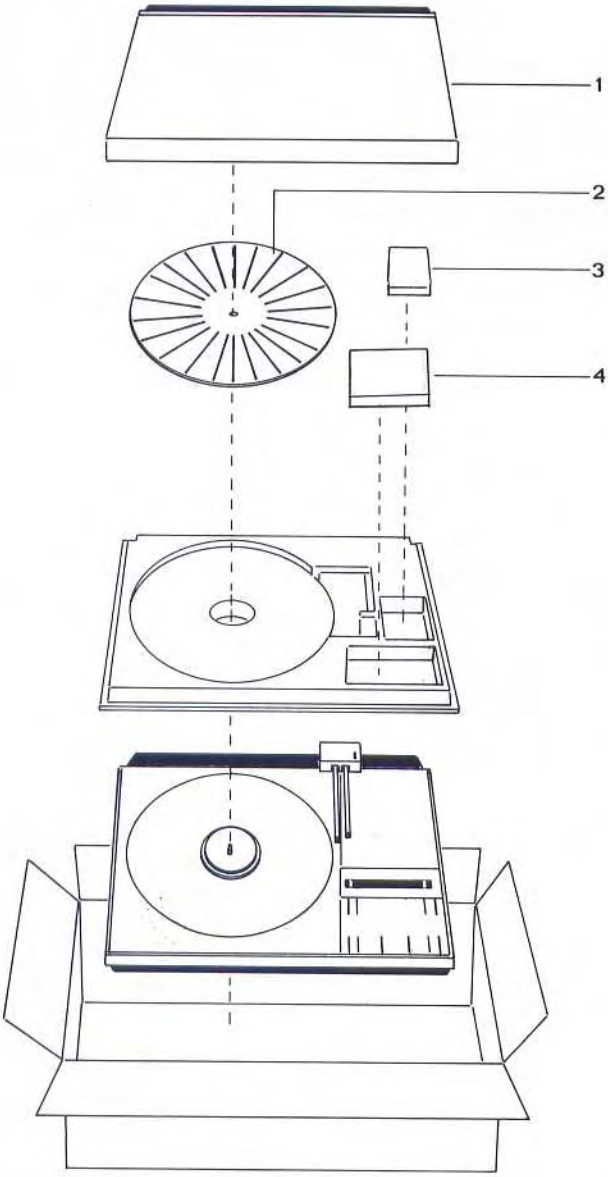

1 Dust cover
2 Turntable
3 Pick-up
4 Drive belt and adapter

ASSEMBLY AFTER TRANSPORT

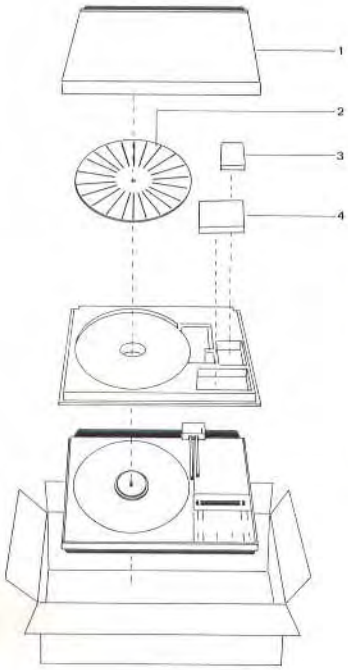

Assembly after Transport

Your Beogram 4002-6000 is protected in several ways against damage in transit.

It is important that your Beogram is correctly assembled and set up after it is unpacked. If you wish, you may leave this to your dealer.

The following components are enclosed in the foam inserts in the carton:

1 Dust cover
2 Turntable
3 Drive belt and adapter
4 Pick-up

The pickup carton contains the following items:

SP 15 pickup cartridge with stylus guard
Screwdriver for stylus force adjustment
Cleaning brush for pickup stylus
Balance for checking stylus force.

NOTE: Keep the original packing and this instruction for use at a later transport. Unnecessary damage may be done to the record player if it is sent without being correctly secured and packed.

To prepare your Beogram for use, proceed as follows:

Turn three lock screws in the bottom of the turntable unit anti-clockwise against the stop (towards PLAY).

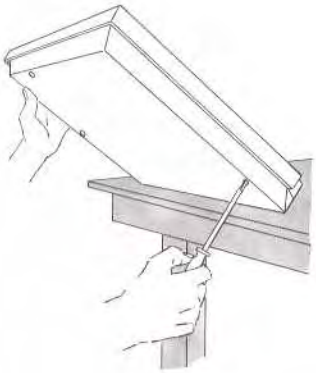

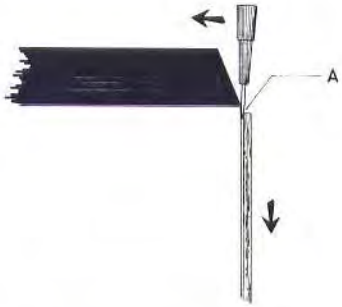

Turntable and Belt, and One Inside Lock Screw

(1) Using a small screwdriver, release two spring locks, one in either side in the back left and right corners, marked A in the sketch.

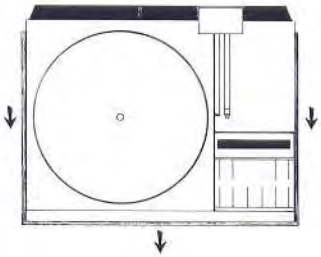

(2) The wooden frame may now be pushed approx. 1 cm forward, thereby releasing the aluminium chassis decks.

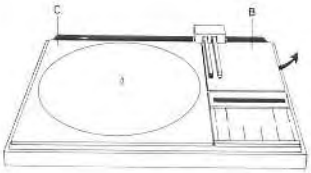

(3) Lift up chassis deck B and remove it towards the right.

(4) Lift up and remove chassis deck C.

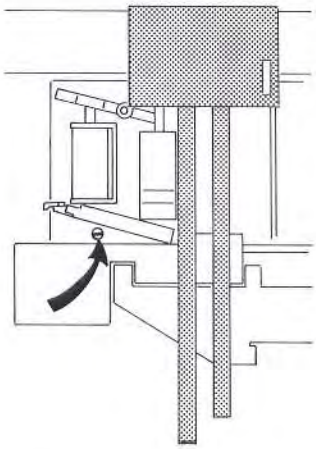

(5) Close to the pickup lifting system is a lock screw which secures the system during transport. This screw should be turned anti-clockwise and removed.

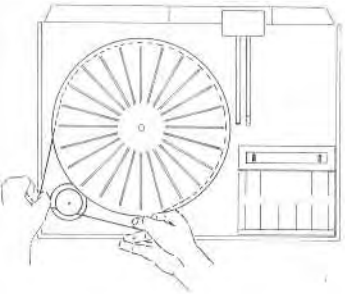

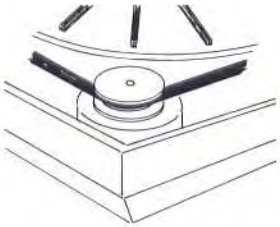

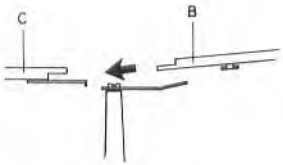

(6) The turntable and belt can be mounted in various ways. The simplest one is to put the belt on the turntable before lowering the latter on to the shaft.

First put the belt around the turntable belt-face on the under side. The bright side should face outwards, and the belt should temporarily be placed up above the rim as shown in the sketch.

(7) Then lower the turntable on to its shaft and bring the belt around the motor belt pulley without twisting it.

Turn the turntable slightly to check that the mechanical transmission is smooth and unimpeded.

(8) Lower chassis deck C back into place; the spring bar should point towards the top right corner.

(9) Put chassis deck B diagonally down; the milled edge (see sketch) should face left, towards C, and be pushed in below the spring bar.

(10) Move the wooden sides and front backwards.

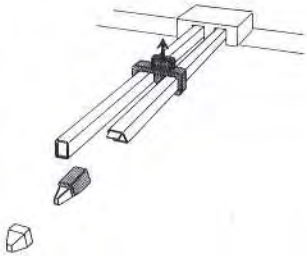

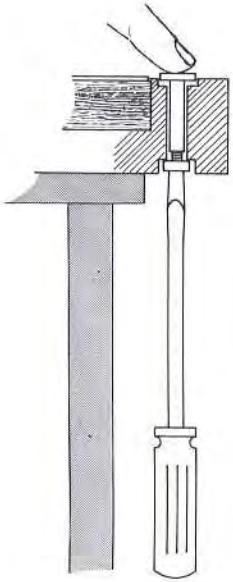

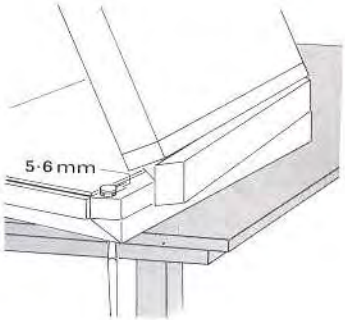

Pickup

(1) Remove the transit protection device, inserted between the two arms.

(2) Insert the pickup cartridge in the pickup arm.

(3) Remove the stylus guard.

Mounting the Dust Cover

The dust cover has an aluminium panel which contains the hinge and spring system proper. To secure this panel to the turntable unit, proceed as follows:

(1) Turn two screws in the rear corners in the bottom of the turntable unit anti-clockwise, pressing a finger against the surface of the lock bushing to prevent it from rotating.

(2) When the screws have been loosened sufficiently to permit the bushings to get raised 5 - 6 mm, the aluminium panel of the dust cover may be brought in below the heads of the two lock bushings.

(3) Retighten the screws. You may find it necessary first to close the cover and bring it into position before finally tightening the screws.

All other information - amplifier connection, mains voltage, mains frequency, adjustments and operating procedure - is given in the enclosed operating instructions for the Beogram.

6-74 35051